# DDR3(L) SDRAM

## 32M x 16 Bit x 8 Banks DDR3(L) SDRAM

## Feature

- $V_{DD}$ = $V_{DDQ}$ = 1.35V (1.283–1.45V)
- Backward-compatible to $V_{DD}$ = $V_{DDQ}$ = 1.5V ±0.075V
- Differential bidirectional data strobe
- 8*n*-bit prefetch architecture
- Differential clock inputs (CK, CK#)
- 8 internal banks
- Nominal and dynamic on-die termination (ODT)
- for data, strobe, and mask signals
- Programmable CAS (READ) latency (CL)
- Programmable posted CAS additive latency (AL)
- Programmable CAS (WRITE) latency (CWL)
- Fixed burst length (BL) of 8 and burst chop (BC) of 4 (via the mode register set [MRS])
- Selectable BC4 or BL8 on-the-fly (OTF)
- Self refresh mode
- Self refresh temperature (SRT)
- Automatic self refresh (ASR)
- Write leveling
- Multipurpose register
- Output driver calibration

## Ordering Information

| Product ID | Max Freq. | $V_{DD}$ | Data Rate (CL-tRCD-tRP) | Package | Comments |
|---|---|---|---|---|---|
| M15T4G16256A–EFBIG2P | 1066 MHz | 1.35V / 1.5V | DDR3(L)-2133 (14-14-14) | 96 ball BGA | Pb-free |
| M15T4G16256A–DEBIG2P | 933MHz | 1.35V / 1.5V | DDR3(L)-1866 (13-13-13) | 96 ball BGA | Pb-free |

## Description

The 1.35V DDR3L SDRAM device is a low-voltage version of the 1.5V DDR3 SDRAM device. Refer to the DDR3 (1.5V) SDRAM data sheet specifications when running in 1.5V compatible mode.

## SDRAM Addressing

| Configuration | 256Mb x 16 |
|---|---|
| # of Bank | 8 |
| Bank Address | BA0 – BA2 |
| Row Address | A0 – A14 |
| Column Address | A0 – A9 |
| Page size | 2KB |

## Pin Configuration – 96 balls BGA Package

< TOP View>

See the balls through the package

| | 1 | 2 | 3 | 4 | 5 | 6 | 7 | 8 | 9 |
|---|---|---|---|---|---|---|---|---|---|
| A | VDDQ | DQ13 | DQ15 | | | | DQ12 | VDDQ | VSS |
| B | VSSQ | VDD | VSS | | | | UDQS# | DQ14 | VSSQ |
| C | VDDQ | DQ11 | DQ9 | | | | UDQS | DQ10 | VDDQ |
| D | VSSQ | VDDQ | UDM | | | | DQ8 | VSSQ | VDD |
| E | VSS | VSSQ | DQ0 | | | | LDM | VSSQ | VDDQ |
| F | VDDQ | DQ2 | LDQS | | | | DQ1 | DQ3 | VSSQ |
| G | VSSQ | DQ6 | LDQS# | | | | VDD | VSS | VSSQ |
| H | VREFDQ | VDDQ | DQ4 | | | | DQ7 | DQ5 | VDDQ |
| J | NC | VSS | RAS# | | | | CK | VSS | NC |
| K | ODT | VDD | CAS# | | | | CK# | VDD | CKE |
| L | NC | CS# | WE# | | | | A10/AP | ZQ | NC |
| M | VSS | BA0 | BA2 | | | | NC | VREFCA | VSS |
| N | VDD | A3 | A0 | | | | A12/BC# | BA1 | VDD |
| P | VSS | A5 | A2 | | | | A1 | A4 | VSS |
| R | VDD | A7 | A9 | | | | A11 | A6 | VDD |
| T | VSS | RESET# | A13 | | | | A14 | A8 | VSS |

## Input / Output Functional Description

| Symbol | Type | Description |
|---|---|---|
| A[14:13], A12/BC#, A11, A10/AP, A[9:0] | Input | **Address inputs:** Provide the row address for ACTIVATE commands, and the column address and auto precharge bit (A10) for READ/WRITE commands, to select one location out of the memory array in the respective bank. A10 sampled during a PRECHARGE command determines whether the PRECHARGE applies to one bank (A10 LOW, bank selected by BA[2:0]) or all banks (A10 HIGH). The address inputs also provide the op-code during a LOAD MODE command. Address inputs are referenced to $V_{REFCA}$. A12/BC#: When enabled in the mode register (MR), A12 is sampled during READ and WRITE commands to deter- mine whether burst chop (on-the-fly) will be performed (HIGH = BL8 or no burst chop, LOW = BC4 burst chop). See Truth Table - Command. |
| BA[2:0] | Input | **Bank address inputs:** BA[2:0] define the bank to which an ACTIVATE, READ, WRITE, or PRECHARGE command is being applied. BA[2:0] define which mode register (MR0, MR1, MR2, or MR3) is loaded during the LOAD MODE command. BA[2:0] are referenced to $V_{REFCA}$. |
| CK, CK# | Input | **Clock:** CK and CK# are differential clock inputs. All address and control input signals are sampled on the crossing of the positive edge of CK and the negative edge of CK#. Out- put data strobe (LDQS, LDQS#, UDQS, UDQS#) is referenced to the crossings of CK and CK#. |
| CKE | Input | **Clock enable:** CKE enables (registered HIGH) and disables (registered LOW) internal circuitry and clocks on the DRAM. The specific circuitry that is enabled/ disabled is dependent upon the DDR3 SDRAM configuration and operating mode. Taking CKE LOW provides PRECHARGE power-down and SELF REFRESH operations (all banks idle) or active power-down (row active in any bank). CKE is synchronous for power-down entry and exit and for self refresh entry. CKE is asynchronous for self refresh exit. Input buffers (excluding CK, CK#, CKE, RESET#, and ODT) are disabled during power-down. Input buffers (excluding CKE and RESET#) are disabled during SELF REFRESH. CKE is referenced to $V_{REFCA}$. |
| CS# | Input | **Chip select:** CS# enables (registered LOW) and disables (registered HIGH) the command decoder. All commands are masked when CS# is registered HIGH. CS# provides for external rank selection on systems with multiple ranks. CS# is considered part of the command code. CS# is referenced to $V_{REFCA}$. |
| LDM | Input | **Input data mask:** LDM is a lower-byte, input mask signal for write data. Lower-byte input data is masked when LDM is sampled HIGH along with the input data during a write access. Although the LDM ball is input-only, the LDM loading is designed to match that of the DQ and LDQS balls. LDM is referenced to $V_{REFDQ}$. |
| ODT | Input | **On-die termination:** ODT enables (registered HIGH) and disables (registered LOW) termination resistance internal to the DDR3 SDRAM. When enabled in normal operation, ODT is only applied to each of the following balls: DQ[15:0], LDQS, LDQS#, UDQS, UDQS#, LDM, and UDM for the x16. The ODT input is ignored if disabled via the LOAD MODE command. ODT is referenced to $V_{REFCA}$. |
| RAS#, CAS#, WE# | Input | **Command inputs:** RAS#, CAS#, and WE# (along with CS#) define the command being entered and are referenced to $V_{REFCA}$. |
| RESET# | Input | **Reset:** RESET# is an active LOW CMOS input referenced to $V_{SS}$. The RESET# input receiver is a CMOS input defined as a rail-to-rail signal with DC HIGH ≥ 0.8 × $V_{DDQ}$ and DC LOW ≤ 0.2 × $V_{DDQ}$. RESET# assertion and deassertion are asynchronous. |

| Symbol | Type | Description |
|---|---|---|
| UDM | Input | **Input data mask:** UDM is an upper-byte, input mask signal for write data. Upper-byte input data is masked when UDM is sampled HIGH along with the input data during a write access. Although the UDM ball is input-only, the UDM loading is designed to match that of the DQ and UDQS balls. UDM is referenced to $V_{REFDQ}$. |
| DQ[7:0] | I/O | **Data input/output:** Lower byte of bidirectional data bus for the x16 configuration. DQ[7:0] are referenced to $V_{REFDQ}$. |
| DQ[15:8] | I/O | **Data input/output:** Upper byte of bidirectional data bus for the x16 configuration. DQ[15:8] are referenced to $V_{REFDQ}$. |
| LDQS, LDQS# | I/O | **Lower byte data strobe:** Output with read data. Edge-aligned with read data. Input with write data. LDQS is center-aligned to write data. |
| UDQS, UDQS# | I/O | **Upper byte data strobe:** Output with read data. Edge-aligned with read data. Input with write data. UDQS is center-aligned to write data. |
| $V_{DD}$ | Supply | **Power supply:** 1.5V ±0.075V. |
| $V_{DDQ}$ | Supply | **DQ power supply:** 1.5V ±0.075V. Isolated on the device for improved noise immunity. |
| $V_{REFCA}$ | Supply | **Reference voltage for control, command, and address:** $V_{REFCA}$ must be maintained at all times (including self refresh) for proper device operation. |
| $V_{REFDQ}$ | Supply | **Reference voltage for data:** $V_{REFDQ}$ must be maintained at all times (including self refresh) for proper device operation. |
| $V_{SS}$ | Supply | Ground. |
| $V_{SSQ}$ | Supply | **DQ ground:** Isolated on the device for improved noise immunity. |
| ZQ | Reference | **External reference ball for output drive calibration:** This ball is tied to an external 240Ω resistor ($R_{ZQ}$), which is tied to $V_{SSQ}$. |
| NC | – | **No connect:** These balls should be left unconnected (the ball has no connection to the DRAM or to other balls). |

**Simplified State Diagram**

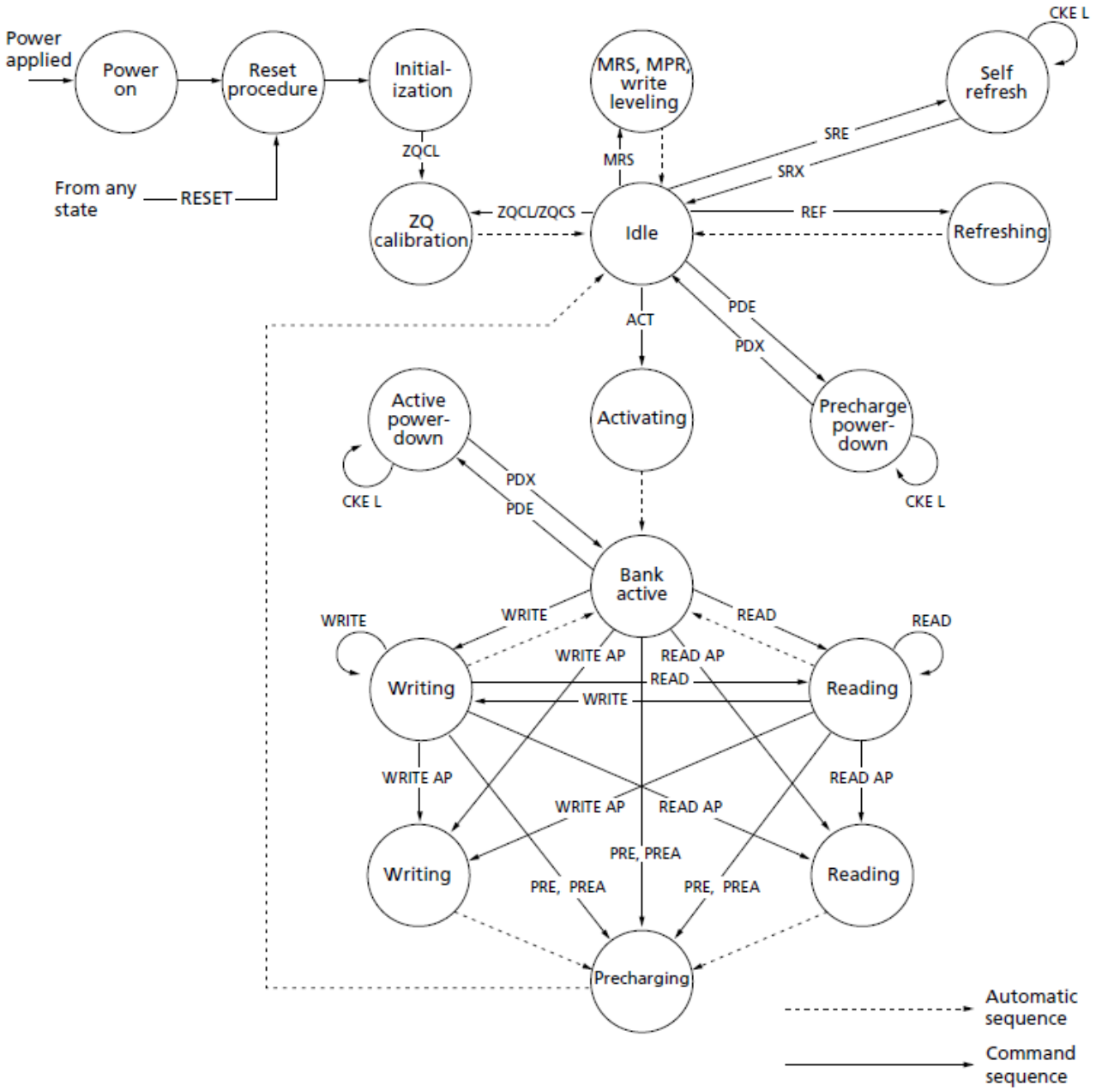


ACT = ACTIVATE
MPR = Multipurpose register
MRS = Mode register set
PDE = Power-down entry
PDX = Power-down exit
PRE = PRECHARGE

PREA = PRECHARGE ALL
READ = RD, RDS4, RDS8
READ AP = RDAP, RDAPS4, RDAPS8
REF = REFRESH
RESET = START RESET PROCEDURE
SRE = Self refresh entry

SRX = Self refresh exit
WRITE = WR, WRS4, WRS8
WRITE AP = WRAP, WRAPS4, WRAPS8
ZQCL = ZQ LONG CALIBRATION
ZQCS = ZQ SHORT CALIBRATION

## Functional Description

DDR3 SDRAM uses a double data rate architecture to achieve high-speed operation.

The double data rate architecture is an 8n-prefetch architecture with an interface designed to transfer two data words per clock cycle at the I/O pins. A single read or write operation for the DDR3 SDRAM effectively consists of a single 8n-bit-wide, four-clock cycle data transfer at the internal DRAM core and eight corresponding n-bit-wide, one half-clock-cycle data transfers at the I/O pins.

The differential data strobe (DQS, DQS#) is transmitted externally, along with data, for use in data capture at the DDR3 SDRAM input receiver. DQS is center-aligned with data for WRITEs. The read data is transmitted by the DDR3 SDRAM and edge-aligned to the data strobes.

The DDR3 SDRAM operates from a differential clock (CK and CK#). The crossing of CK going HIGH and CK# going LOW is referred to as the positive edge of CK. Control, command, and address signals are registered at every positive edge of CK. Input data is registered on the first rising edge of DQS after the WRITE preamble, and output data is referenced on the first rising edge of DQS after the READ preamble.

Read and write accesses to the DDR3 SDRAM are burst-oriented. Accesses start at a selected location and continue for a programmed number of locations in a programmed sequence. Accesses begin with the registration of an ACTIVATE command, which is then followed by a READ or WRITE command. The address bits registered coincident with the ACTIVATE command are used to select the bank and row to be accessed. The address bits registered coincident with the READ or WRITE commands are used to select the bank and the starting column location for the burst access.

The device uses a READ and WRITE BL8 and BC4. An auto precharge function may be enabled to provide a self-timed row precharge that is initiated at the end of the burst access.

As with standard DDR SDRAM, the pipelined, multibank architecture of DDR3 SDRAM allows for concurrent operation, thereby providing high bandwidth by hiding row precharge and activation time.

A self refresh mode is provided, along with a power-saving, power-down mode.

## General Notes

- The functionality and the timing specifications discussed in this data sheet are for the DLL enable mode of operation (normal operation).
- Throughout this data sheet, various figures and text refer to DQs as “DQ.” DQ is to be interpreted as any and all DQ collectively, unless specifically stated otherwise.
- The terms “DQS” and “CK” found throughout this data sheet are to be interpreted as DQS, DQS# and CK, CK# respectively, unless specifically stated otherwise.
- Complete functionality may be described throughout the document; any page or diagram may have been simplified to convey a topic and may not be inclusive of all requirements.
- Any specific requirement takes precedence over a general statement.
- Any functionality not specifically stated is considered undefined, illegal, and not supported, and can result in unknown operation.
- Row addressing is denoted as A[n:0]. For example, 1Gb: n = 12 (x16); 1Gb: n = 13 (x8); 2Gb: n = 13 (x16) and 2Gb: n = 14 (x8); 4Gb: n = 14 (x16); and 4Gb: n = 15 (x8).
- Dynamic ODT has a special use case: when DDR3 devices are architected for use in a single rank memory array, the ODT ball can be wired HIGH rather than routed. Refer to the Dynamic ODT Special Use Case section.
- A x16 device's DQ bus is comprised of two bytes. If only one of the bytes needs to be used, use the lower byte for data transfers and terminate the upper byte as noted:
  - Connect UDQS to ground via 1kΩ* resistor.
  - Connect UDQS# to $V_{DD}$ via 1kΩ* resistor.
  - Connect UDM to $V_{DD}$ via 1kΩ* resistor.
  - Connect DQ[15:8] individually to either $V_{SS}$, $V_{DD}$, or $V_{REF}$ via 1k Ω resistors,* or float DQ[15:8].
- *If ODT is used, 1kΩ resistor should be changed to 4x that of the selected ODT.

## Functional Block Diagrams

DDR3 SDRAM is a high-speed, CMOS dynamic random access memory. It is internally configured as an 8-bank DRAM.

### Functional Block Diagram (x16)

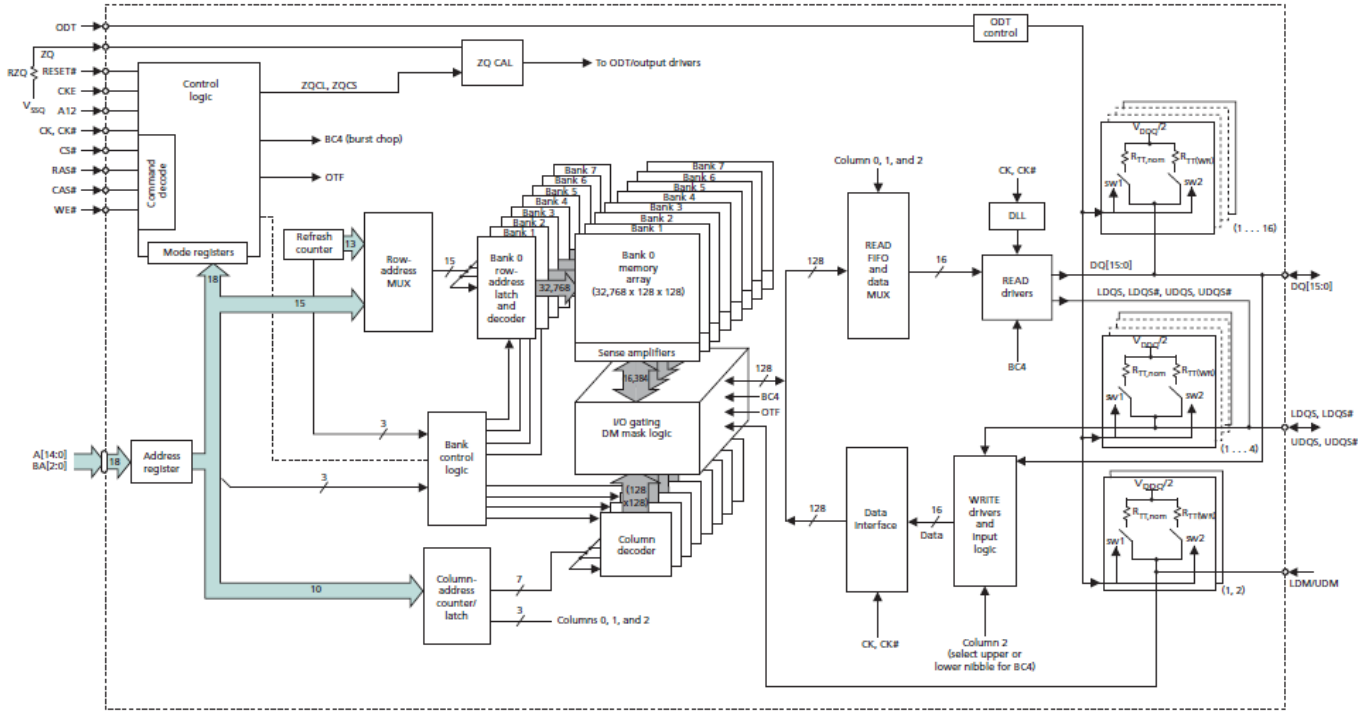

# Electrical Specifications

## Absolute Ratings

Stresses greater than those listed may cause permanent damage to the device. This is a stress rating only, and functional operation of the device at these or any other conditions outside those indicated in the operational sections of this specification is not implied.

Exposure to absolute maximum rating conditions for extended periods may adversely affect reliability.

### Absolute Maximum Ratings

| Symbol | Parameter | Min | Max | Unit | Note |
|---|---|---|---|---|---|
| $V_{DD}$ | $V_{DD}$ supply voltage relative to $V_{SS}$ | –0.4 | 1.975 | V | 1 |
| $V_{DDQ}$ | $V_{DD}$ supply voltage relative to $V_{SSQ}$ | –0.4 | 1.975 | V | |
| $V_{IN}$, $V_{OUT}$ | Voltage on any pin relative to $V_{SS}$ | –0.4 | 1.975 | V | |
| $T_C$ | Operating case temperature | –40 | 95 | ℃ | 2,3 |
| $T_{STG}$ | Storage temperature | –55 | 150 | ℃ | |

**Note:**

1. $V_{DD}$ and $V_{DDQ}$ must be within 300mV of each other at all times, and $V_{REF}$ must not be greater than 0.6 × $V_{DDQ}$. When $V_{DD}$ and $V_{DDQ}$ are <500mV, $V_{REF}$ can be ≤300mV.
2. MAX operating case temperature. $T_C$ is measured in the center of the package.
3. Device functionality is not guaranteed if the DRAM device exceeds the maximum $T_C$ during operation.

## Input/Output Capacitance

### DDR3L Input/Output Capacitance

Note 1 applies to the entire table; gray-shaded cells are DDR3L unique values; all other values are the same for both DDR3L and DDR3

| Capacitance Parameters | Symbol | DDR3L-1866 | | DDR3L-2133 | | Unit | Note |
|---|---|---|---|---|---|---|---|
| | | Min | Max | Min | Max | | |
| CK and CK# | $C_{CK}$ | 0.8 | 1.3 | 0.8 | 1.3 | pF | |
| ΔC: CK to CK# | $C_{DCK}$ | 0.0 | 0.15 | 0.0 | 0.15 | pF | |
| Single-end I/O: DQ, DM | $C_{IO}$ | 1.4 | 2.1 | 1.4 | 2.1 | pF | 2 |
| Differential I/O: DQS, DQS# | $C_{IO}$ | 1.4 | 2.1 | 1.4 | 2.1 | pF | 3 |
| ΔC: DQS to DQS# | $C_{DDQS}$ | 0.0 | 0.15 | 0.0 | 0.15 | pF | 3 |
| ΔC: DQ to DQS | $C_{DIO}$ | –0.5 | 0.3 | -0.5 | 0.3 | pF | 4 |
| Inputs (CTRL, CMD, ADDR) | $C_I$ | 0.75 | 1.2 | 0.75 | 1.2 | pF | 5 |
| ΔC: CTRL to CK | $C_{DI_CTRL}$ | –0.4 | 0.2 | –0.4 | 0.2 | pF | 6 |
| ΔC: CMD_ADDR to CK | $C_{DI_CMD_ADDR}$ | –0.4 | 0.4 | –0.4 | 0.4 | pF | 7 |
| ZQ pin capacitance | $C_{ZQ}$ | – | 3.0 | – | 3.0 | pF | |
| Reset pin capacitance | $C_{RE}$ | – | 3.0 | – | 3.0 | pF | |

**Note:**

1. $V_{DD}$ = 1.35V (1.283–1.45V), $V_{DDQ} = V_{DD}$, $V_{REF} = V_{SS}$, *f* = 100 MHz, $T_C$ = 25°C. $V_{OUT(DC)} = 0.5 \times V_{DDQ}$, $V_{OUT}$ = 0.1V (peak-to-peak).
2. DM input is grouped with I/O pins, reflecting the fact that they are matched in loading.
3. $C_{DDQS}$ is for DQS vs. DQS# separately.
4. $C_{DIO} = C_{IO(DQ)} - 0.5 \times (C_{IO(DQS)} + C_{IO(DQS\#)})$.
5. Excludes CK, CK#; CTRL = ODT, CS#, and CKE; CMD = RAS#, CAS#, and WE#; ADDR = A[*n*:0], BA[2:0].
6. $C_{DI_CTRL} = C_{I(CTRL)} - 0.5 \times (C_{CK(CK)} + C_{CK(CK\#)})$.
7. $C_{DI_CMD_ADDR} = C_{I(CMD_ADDR)} - 0.5 \times (C_{CK(CK)} + C_{CK(CK\#)})$.

## Electrical Specifications – $I_{DD}$ Specifications and Conditions

Within the following $I_{DD}$ measurement tables, the following definitions and conditions are used, unless stated otherwise:

- LOW: $V_{IN} \leq V_{IL(AC)max}$; HIGH: $V_{IN} \geq V_{IH(AC)min}$.
- Midlevel: Inputs are $V_{REF} = V_{DD}/2$.
- $R_{ON}$ set to RZQ/7 (34Ω).
- $R_{TT,nom}$ set to RZQ/6 (40Ω).
- $R_{TT(WR)}$ set to RZQ/2 (120Ω).
- $Q_{OFF}$ is enabled in MR1.
- ODT is enabled in MR1 ($R_{TT,nom}$) and MR2 ($R_{TT(WR)}$).
- External DQ/DQS/DM load resistor is 25Ω to $V_{DDQ}/2$.
- Burst lengths are BL8 fixed.
- AL equals 0 (except in $I_{DD7}$).
- $I_{DD}$ specifications are tested after the device is properly initialized.
- Input slew rate is specified by AC parametric test conditions.
- ASR is disabled.
- Read burst type uses nibble sequential (MR0[3] = 0).
- Loop patterns must be executed at least once before current measurements begin.

### DDR3L Timing Parameters Used for $I_{DD}$ Measurements – Clock Units

| $I_{DD}$ Parameter | DDR3L-1866 (13-13-13) | DDR3L-2133 (14-14-14) | Unit |
|---|---|---|---|
| $^{t}$CK (MIN) $I_{DD}$ | 1.07 | 0.938 | ns |
| CL $I_{DD}$ | 13 | 14 | CK |
| $^{t}$RCD (MIN) $I_{DD}$ | 13 | 14 | CK |
| $^{t}$RC (MIN) $I_{DD}$ | 45 | 50 | CK |
| $^{t}$RAS (MIN) $I_{DD}$ | 32 | 36 | CK |
| $^{t}$RP (MIN) | 13 | 14 | CK |
| $^{t}$FAW (x16) | 33 | 38 | CK |
| $^{t}$RRD (x16) | 6 | 7 | CK |
| $I_{DD}$ (4Gb) | 243 | 279 | CK |

**DDR3L $I_{DD0}$ Measurement Loop**

| CK, /CK | CKE | Sub-Loop | Cycle Number | Command | /CS | /RAS | /CAS | /WE | ODT | BA[2:0] | A[15:11] | A[10] | A[9:7] | A[6:3] | A[2:0] | Data[2] |
|---|---|---|---|---|---|---|---|---|---|---|---|---|---|---|---|---|
| toggling | Static High | 0 | 0 | ACT | 0 | 0 | 1 | 1 | 0 | 0 | 00 | 0 | 0 | 0 | 0 | - |
| | | | 1, 2 | D, D | 1 | 0 | 0 | 0 | 0 | 0 | 00 | 0 | 0 | 0 | 0 | - |
| | | | 3, 4 | D#, D# | 1 | 1 | 1 | 1 | 0 | 0 | 00 | 0 | 0 | 0 | 0 | - |
| | | | … | repeat pattern 1...4 until nRAS - 1, truncate if necessary | | | | | | | | | | | | |
| | | | nRAS | PRE | 0 | 0 | 1 | 0 | 0 | 0 | 00 | 0 | 0 | 0 | 0 | - |
| | | | … | repeat pattern 1...4 until nRC - 1, truncate if necessary | | | | | | | | | | | | |
| | | | nRC | ACT | 0 | 0 | 1 | 1 | 0 | 0 | 00 | 0 | 0 | F | 0 | - |
| | | | nRC + 1, 2 | D, D | 1 | 0 | 0 | 0 | 0 | 0 | 00 | 0 | 0 | F | 0 | - |
| | | | nRC + 3, 4 | D#, D# | 1 | 1 | 1 | 1 | 0 | 0 | 00 | 0 | 0 | F | 0 | - |
| | | | … | repeat pattern nRC + 1,...,4 until 1*nRC + nRAS - 1, truncate if necessary | | | | | | | | | | | | |
| | | | nRC + nRAS | PRE | 0 | 0 | 1 | 0 | 0 | 0 | 00 | 0 | 0 | F | 0 | - |
| | | | … | repeat nRC + 1,...,4 until 2*nRC - 1, truncate if necessary | | | | | | | | | | | | |
| | | 1 | 2*nRC | repeat Sub-Loop 0, use **BA[2:0] = 1** instead | | | | | | | | | | | | |
| | | 2 | 4*nRC | repeat Sub-Loop 0, use **BA[2:0] = 2** instead | | | | | | | | | | | | |
| | | 3 | 6*nRC | repeat Sub-Loop 0, use **BA[2:0] = 3** instead | | | | | | | | | | | | |
| | | 4 | 8*nRC | repeat Sub-Loop 0, use **BA[2:0] = 4** instead | | | | | | | | | | | | |
| | | 5 | 10*nRC | repeat Sub-Loop 0, use **BA[2:0] = 5** instead | | | | | | | | | | | | |
| | | 6 | 12*nRC | repeat Sub-Loop 0, use **BA[2:0] = 6** instead | | | | | | | | | | | | |
| | | 7 | 14*nRC | repeat Sub-Loop 0, use **BA[2:0] = 7** instead | | | | | | | | | | | | |

**Note:**

1. DQ, DQS, /DQS are midlevel.
2. DM is LOW.
3. Only selected bank (single) active.

**DDR3L $I_{DD1}$ Measurement Loop**

| CK, /CK | CKE | Sub-Loop | Cycle Number | Command | /CS | /RAS | /CAS | /WE | ODT | BA[2:0] | A[15:11] | A[10] | A[9:7] | A[6:3] | A[2:0] | Data[2] |
|---|---|---|---|---|---|---|---|---|---|---|---|---|---|---|---|---|
| toggling | Static High | 0 | 0 | ACT | 0 | 0 | 1 | 1 | 0 | 0 | 00 | 0 | 0 | 0 | 0 | - |
| | | | 1, 2 | D, D | 1 | 0 | 0 | 0 | 0 | 0 | 00 | 0 | 0 | 0 | 0 | - |
| | | | 3, 4 | D#, D# | 1 | 1 | 1 | 1 | 0 | 0 | 00 | 0 | 0 | 0 | 0 | - |
| | | | … | repeat pattern 1...4 until nRCD - 1, truncate if necessary | | | | | | | | | | | | |
| | | | nRCD | RD | 0 | 1 | 0 | 1 | 0 | 0 | 00 | 0 | 0 | 0 | 0 | 00000000 |
| | | | … | repeat pattern 1...4 until nRAS - 1, truncate if necessary | | | | | | | | | | | | |
| | | | nRAS | PRE | 0 | 0 | 1 | 0 | 0 | 0 | 00 | 0 | 0 | 0 | 0 | - |
| | | | … | repeat pattern 1...4 until nRC - 1, truncate if necessary | | | | | | | | | | | | |
| | | | nRC + 0 | ACT | 0 | 0 | 1 | 1 | 0 | 0 | 00 | 0 | 0 | F | 0 | - |
| | | | 1*nRC + 1, 2 | D, D | 1 | 0 | 0 | 0 | 0 | 0 | 00 | 0 | 0 | F | 0 | - |
| | | | 1*nRC + 3, 4 | D#, D# | 1 | 1 | 1 | 1 | 0 | 0 | 00 | 0 | 0 | F | 0 | - |
| | | | … | repeat pattern nRC + 1,..., 4 until nRC + nRCD - 1, truncate if necessary | | | | | | | | | | | | |
| | | | 1*nRC + nRCD | RD | 0 | 1 | 0 | 1 | 0 | 0 | 00 | 0 | 0 | F | 0 | 00110011 |
| | | | … | repeat pattern nRC + 1,..., 4 until nRC + nRAS - 1, truncate if necessary | | | | | | | | | | | | |
| | | | 1*nRC + nRAS | PRE | 0 | 0 | 1 | 0 | 0 | 0 | 00 | 0 | 0 | F | 0 | - |
| | | | … | repeat pattern nRC + 1,..., 4 until 2 * nRC - 1, truncate if necessary | | | | | | | | | | | | |
| | | 1 | 2*nRC | repeat Sub-Loop 0, use **BA[2:0] = 1** instead | | | | | | | | | | | | |
| | | 2 | 4*nRC | repeat Sub-Loop 0, use **BA[2:0] = 2** instead | | | | | | | | | | | | |
| | | 3 | 6*nRC | repeat Sub-Loop 0, use **BA[2:0] = 3** instead | | | | | | | | | | | | |
| | | 4 | 8*nRC | repeat Sub-Loop 0, use **BA[2:0] = 4** instead | | | | | | | | | | | | |
| | | 5 | 10*nRC | repeat Sub-Loop 0, use **BA[2:0] = 5** instead | | | | | | | | | | | | |
| | | 6 | 12*nRC | repeat Sub-Loop 0, use **BA[2:0] = 6** instead | | | | | | | | | | | | |
| | | 7 | 14*nRC | repeat Sub-Loop 0, use **BA[2:0] = 7** instead | | | | | | | | | | | | |

**Note:**

1. DQ, DQS, DQS# are midlevel unless driven as required by the RD command.
2. DM is LOW.
3. Burst sequence is driven on each DQ signal by the RD command.
4. Only selected bank (single) active.

**DDR3L $I_{DD}$ Measurement Conditions for Power-Down Currents**

| Name | $I_{DD2P0}$ Precharge Power-Down Current (Slow Exit)[1] | $I_{DD2P1}$ Precharge Power-Down Current (Fast Exit)[1] | $I_{DD2Q}$ Precharge Quiet Standby Current | $I_{DD3P}$ Active Power-Down Current |
|---|---|---|---|---|
| Timing pattern | N/A | N/A | N/A | N/A |
| CKE | LOW | LOW | HIGH | LOW |
| External clock | Toggling | Toggling | Toggling | Toggling |
| $^{t}$CK | $^{t}$CK (MIN) $I_{DD}$ | $^{t}$CK (MIN) $I_{DD}$ | $^{t}$CK (MIN) $I_{DD}$ | $^{t}$CK (MIN) $I_{DD}$ |
| $^{t}$RC | N/A | N/A | N/A | N/A |
| $^{t}$RAS | N/A | N/A | N/A | N/A |
| $^{t}$RCD | N/A | N/A | N/A | N/A |
| $^{t}$RRD | N/A | N/A | N/A | N/A |
| $^{t}$RC | N/A | N/A | N/A | N/A |
| CL | N/A | N/A | N/A | N/A |
| AL | N/A | N/A | N/A | N/A |
| CS# | HIGH | HIGH | HIGH | HIGH |
| Command inputs | LOW | LOW | LOW | LOW |
| Row/column addr | LOW | LOW | LOW | LOW |
| Bank addresses | LOW | LOW | LOW | LOW |
| DM | LOW | LOW | LOW | LOW |
| Data I/O | Midlevel | Midlevel | Midlevel | Midlevel |
| Output buffer DQ, DQS | Enabled | Enabled | Enabled | Enabled |
| ODT2 | Enabled, off | Enabled, off | Enabled, off | Enabled, off |
| Burst length | 8 | 8 | 8 | 8 |
| Active banks | None | None | None | All |
| Idle banks | All | All | All | None |
| Special notes | N/A | N/A | N/A | N/A |

**Note:**

1. MR0[12] defines DLL on/off behavior during precharge power-down only; DLL on (fast exit, MR0[12] = 1) and DLL off (slow exit, MR0[12] = 0).
2. “Enabled, off” means the MR bits are enabled, but the signal is LOW.

**DDR3L $I_{DD2N}$ and IDD3N Measurement-Loop**

| CK, /CK | CKE | Sub-Loop | Cycle Number | Command | /CS | /RAS | /CAS | /WE | ODT | BA[2:0] | A[15:11] | A[10] | A[9:7] | A[6:3] | A[2:0] | Data[2] |
|---|---|---|---|---|---|---|---|---|---|---|---|---|---|---|---|---|
| toggling | Static High | 0 | 0 | D | 1 | 0 | 0 | 0 | 0 | 0 | 0 | 0 | 0 | 0 | 0 | - |
| | | | 1 | D | 1 | 0 | 0 | 0 | 0 | 0 | 0 | 0 | 0 | 0 | 0 | - |
| | | | 2 | D# | 1 | 1 | 1 | 1 | 0 | 0 | 0 | 0 | 0 | F | 0 | - |
| | | | 3 | D# | 1 | 1 | 1 | 1 | 0 | 0 | 0 | 0 | 0 | F | 0 | - |
| | | 1 | 4-7 | repeat Sub-Loop 0, use **BA[2:0] = 1** instead | | | | | | | | | | | | |
| | | 2 | 8-11 | repeat Sub-Loop 0, use **BA[2:0] = 2** instead | | | | | | | | | | | | |
| | | 3 | 12-15 | repeat Sub-Loop 0, use **BA[2:0] = 3** instead | | | | | | | | | | | | |
| | | 4 | 16-19 | repeat Sub-Loop 0, use **BA[2:0] = 4** instead | | | | | | | | | | | | |
| | | 5 | 20-23 | repeat Sub-Loop 0, use **BA[2:0] = 5** instead | | | | | | | | | | | | |
| | | 6 | 24-27 | repeat Sub-Loop 0, use **BA[2:0] = 6** instead | | | | | | | | | | | | |
| | | 7 | 28-31 | repeat Sub-Loop 0, use **BA[2:0] = 7** instead | | | | | | | | | | | | |

**Note:**
1. DQ, DQS, DQS# are midlevel.
2. DM is LOW.
3. All banks closed during $I_{DD2N}$; all banks open during $I_{DD3N}$.

**DDR3L $I_{DD2NT}$ Measurement-Loop**

| CK, /CK | CKE | Sub-Loop | Cycle Number | Command | /CS | /RAS | /CAS | /WE | ODT | BA[2:0] | A[15:11] | A[10] | A[9:7] | A[6:3] | A[2:0] | Data[2] |
|---|---|---|---|---|---|---|---|---|---|---|---|---|---|---|---|---|
| toggling | Static High | 0 | 0 | D | 1 | 0 | 0 | 0 | 0 | 0 | 0 | 0 | 0 | 0 | 0 | - |
| | | | 1 | D | 1 | 0 | 0 | 0 | 0 | 0 | 0 | 0 | 0 | 0 | 0 | - |
| | | | 2 | D# | 1 | 1 | 1 | 1 | 0 | 0 | 0 | 0 | 0 | F | 0 | - |
| | | | 3 | D# | 1 | 1 | 1 | 1 | 0 | 0 | 0 | 0 | 0 | F | 0 | - |
| | | 1 | 4-7 | repeat Sub-Loop 0, use **BA[2:0] = 1; ODT = 0** | | | | | | | | | | | | |
| | | 2 | 8-11 | repeat Sub-Loop 0, use **BA[2:0] = 2; ODT = 1** | | | | | | | | | | | | |
| | | 3 | 12-15 | repeat Sub-Loop 0, use **BA[2:0] = 3; ODT = 1** | | | | | | | | | | | | |
| | | 4 | 16-19 | repeat Sub-Loop 0, use **BA[2:0] = 4; ODT = 0** | | | | | | | | | | | | |
| | | 5 | 20-23 | repeat Sub-Loop 0, use **BA[2:0] = 5; ODT = 0** | | | | | | | | | | | | |
| | | 6 | 24-27 | repeat Sub-Loop 0, use **BA[2:0] = 6; ODT = 1** | | | | | | | | | | | | |
| | | 7 | 28-31 | repeat Sub-Loop 0, use **BA[2:0] = 7; ODT = 1** | | | | | | | | | | | | |

**Note:**
1. DQ, DQS, DQS# are midlevel.
2. DM is LOW.
3. All banks closed.

**DDR3L $I_{DD4R}$ Measurement-Loop**

| CK, CK# | CKE | Sub-Loop | Cycle Number | Command | CS# | RAS# | CAS# | WE# | ODT | BA[2:0] | A[15:11] | A[10] | A[9:7] | A[6:3] | A[2:0] | Data[3] |
|---|---|---|---|---|---|---|---|---|---|---|---|---|---|---|---|---|
| Toggling | Static HIGH | 0 | 0 | RD | 0 | 1 | 0 | 1 | 0 | 0 | 0 | 0 | 0 | 0 | 0 | 00000000 |
| | | | 1 | D | 1 | 0 | 0 | 0 | 0 | 0 | 0 | 0 | 0 | 0 | 0 | – |
| | | | 2 | D# | 1 | 1 | 1 | 1 | 0 | 0 | 0 | 0 | 0 | 0 | 0 | – |
| | | | 3 | D# | 1 | 1 | 1 | 1 | 0 | 0 | 0 | 0 | 0 | 0 | 0 | – |
| | | | 4 | RD | 0 | 1 | 0 | 1 | 0 | 0 | 0 | 0 | 0 | F | 0 | 00110011 |
| | | | 5 | D | 1 | 0 | 0 | 0 | 0 | 0 | 0 | 0 | 0 | F | 0 | – |
| | | | 6 | D# | 1 | 1 | 1 | 1 | 0 | 0 | 0 | 0 | 0 | F | 0 | – |
| | | | 7 | D# | 1 | 1 | 1 | 1 | 0 | 0 | 0 | 0 | 0 | F | 0 | – |
| | | 1 | 8–15 | Repeat sub-loop 0, use BA[2:0] = 1 | | | | | | | | | | | | |
| | | 2 | 16–23 | Repeat sub-loop 0, use BA[2:0] = 2 | | | | | | | | | | | | |
| | | 3 | 24–31 | Repeat sub-loop 0, use BA[2:0] = 3 | | | | | | | | | | | | |
| | | 4 | 32–39 | Repeat sub-loop 0, use BA[2:0] = 4 | | | | | | | | | | | | |
| | | 5 | 40–47 | Repeat sub-loop 0, use BA[2:0] = 5 | | | | | | | | | | | | |
| | | 6 | 48–55 | Repeat sub-loop 0, use BA[2:0] = 6 | | | | | | | | | | | | |
| | | 7 | 56–63 | Repeat sub-loop 0, use BA[2:0] = 7 | | | | | | | | | | | | |

**Note:**

1. DQ, DQS, DQS# are midlevel when not driving in burst sequence.
2. DM is LOW.
3. Burst sequence is driven on each DQ signal by the RD command.
4. All banks open.

**DDR3L $I_{DD4W}$ Measurement Loop**

| CK, CK# | CKE | Sub-Loop | Cycle Number | Command | CS# | RAS# | CAS# | WE# | ODT | BA[2:0] | A[15:11] | A[10] | A[9:7] | A[6:3] | A[2:0] | Data[3] |
|---|---|---|---|---|---|---|---|---|---|---|---|---|---|---|---|---|
| Toggling | Static HIGH | 0 | 0 | WR | 0 | 1 | 0 | 0 | 1 | 0 | 0 | 0 | 0 | 0 | 0 | 00000000 |
| | | | 1 | D | 1 | 0 | 0 | 0 | 1 | 0 | 0 | 0 | 0 | 0 | 0 | – |
| | | | 2 | D# | 1 | 1 | 1 | 1 | 1 | 0 | 0 | 0 | 0 | 0 | 0 | – |
| | | | 3 | D# | 1 | 1 | 1 | 1 | 1 | 0 | 0 | 0 | 0 | 0 | 0 | – |
| | | | 4 | WR | 0 | 1 | 0 | 0 | 1 | 0 | 0 | 0 | 0 | F | 0 | 00110011 |
| | | | 5 | D | 1 | 0 | 0 | 0 | 1 | 0 | 0 | 0 | 0 | F | 0 | – |
| | | | 6 | D# | 1 | 1 | 1 | 1 | 1 | 0 | 0 | 0 | 0 | F | 0 | – |
| | | | 7 | D# | 1 | 1 | 1 | 1 | 1 | 0 | 0 | 0 | 0 | F | 0 | – |
| | | 1 | 8–15 | Repeat sub-loop 0, use BA[2:0] = 1 | | | | | | | | | | | | |
| | | 2 | 16–23 | Repeat sub-loop 0, use BA[2:0] = 2 | | | | | | | | | | | | |
| | | 3 | 24–31 | Repeat sub-loop 0, use BA[2:0] = 3 | | | | | | | | | | | | |
| | | 4 | 32–39 | Repeat sub-loop 0, use BA[2:0] = 4 | | | | | | | | | | | | |
| | | 5 | 40–47 | Repeat sub-loop 0, use BA[2:0] = 5 | | | | | | | | | | | | |
| | | 6 | 48–55 | Repeat sub-loop 0, use BA[2:0] = 6 | | | | | | | | | | | | |
| | | 7 | 56–63 | Repeat sub-loop 0, use BA[2:0] = 7 | | | | | | | | | | | | |

**Note:**

1. DQ, DQS, DQS# are midlevel when not driving in burst sequence.
2. DM is LOW.
3. Burst sequence is driven on each DQ signal by the WR command.
4. All banks open.

**DDR3L $I_{DD5B}$ Measurement Loop**

| CK, CK# | CKE | Sub-Loop | Cycle Number | Command | CS# | RAS# | CAS# | WE# | ODT | BA[2:0] | A[15:11] | A[10] | A[9:7] | A[6:3] | A[2:0] | Data |
|---|---|---|---|---|---|---|---|---|---|---|---|---|---|---|---|---|
| Toggling | Static HIGH | 0 | 0 | REF | 0 | 0 | 0 | 1 | 0 | 0 | 0 | 0 | 0 | 0 | 0 | – |
| | | 1a | 1 | D | 1 | 0 | 0 | 0 | 0 | 0 | 0 | 0 | 0 | 0 | 0 | – |
| | | | 2 | D | 1 | 0 | 0 | 0 | 0 | 0 | 0 | 0 | 0 | 0 | 0 | – |
| | | | 3 | D# | 1 | 1 | 1 | 1 | 0 | 0 | 0 | 0 | 0 | F | 0 | – |
| | | | 4 | D# | 1 | 1 | 1 | 1 | 0 | 0 | 0 | 0 | 0 | F | 0 | – |
| | | 1b | 5–8 | Repeat sub-loop 1a, use BA[2:0] = 1 | | | | | | | | | | | | |
| | | 1c | 9–12 | Repeat sub-loop 1a, use BA[2:0] = 2 | | | | | | | | | | | | |
| | | 1d | 13–16 | Repeat sub-loop 1a, use BA[2:0] = 3 | | | | | | | | | | | | |
| | | 1e | 17–20 | Repeat sub-loop 1a, use BA[2:0] = 4 | | | | | | | | | | | | |
| | | 1f | 21–24 | Repeat sub-loop 1a, use BA[2:0] = 5 | | | | | | | | | | | | |
| | | 1g | 25–28 | Repeat sub-loop 1a, use BA[2:0] = 6 | | | | | | | | | | | | |
| | | 1h | 29–32 | Repeat sub-loop 1a, use BA[2:0] = 7 | | | | | | | | | | | | |
| | | 2 | 33–nRFC - 1 | Repeat sub-loop 1a through 1h until nRFC - 1; truncate if needed | | | | | | | | | | | | |

**Note:**

1. DQ, DQS, DQS# are midlevel.
2. DM is LOW.

**DDR3L $I_{DD}$ Measurement Conditions for $I_{DD6}$, $I_{DD6ET}$, and $I_{DD8}$**

| $I_{DD}$ Test | $I_{DD6}$: Self Refresh Current Normal Temperature Range $T_C$ = -40°C to +85°C | $I_{DD6ET}$: Self Refresh Current Extended Temperature Range $T_C$ = -40°C to +95°C | $I_{DD8}$: Reset[2] |
|---|---|---|---|
| CKE | LOW | LOW | Midlevel |
| External clock | Off, CK and CK# = LOW | Off, CK and CK# = LOW | Midlevel |
| $t_{CK}$ | N/A | N/A | N/A |
| $t_{RC}$ | N/A | N/A | N/A |
| $t_{RAS}$ | N/A | N/A | N/A |
| $t_{RCD}$ | N/A | N/A | N/A |
| $t_{RRD}$ | N/A | N/A | N/A |
| $t_{RC}$ | N/A | N/A | N/A |
| CL | N/A | N/A | N/A |
| AL | N/A | N/A | N/A |
| CS# | Midlevel | Midlevel | Midlevel |
| Command inputs | Midlevel | Midlevel | Midlevel |
| Row/column addresses | Midlevel | Midlevel | Midlevel |
| Bank addresses | Midlevel | Midlevel | Midlevel |
| Data I/O | Midlevel | Midlevel | Midlevel |
| Output buffer DQ, DQS | Enabled | Enabled | Midlevel |
| ODT[1] | Enabled, midlevel | Enabled, midlevel | Midlevel |
| Burst length | N/A | N/A | N/A |
| Active banks | N/A | N/A | None |
| Idle banks | N/A | N/A | All |
| SRT | Disabled (normal) | Enabled (extended) | N/A |
| ASR | Disabled | Disabled | N/A |

**Note:**

1. "Enabled, midlevel" means the MR command is enabled, but the signal is midlevel.
2. During a cold boot RESET (initialization), current reading is valid after power is stable and RESET has been LOW for 1ms; During a warm boot RESET (while operating), current reading is valid after RESET has been LOW for 200ns + $t_{RFC}$.

**DDR3L $I_{DD7}$ Measurement Loop**

| CK, CK# | CKE | Sub-Loop | Cycle Number | Command | CS# | RAS# | CAS# | WE# | ODT | BA[2:0] | A[15:11] | A[10] | A[9:7] | A[6:3] | A[2:0] | Data[3] |
|---|---|---|---|---|---|---|---|---|---|---|---|---|---|---|---|---|
| Toggling | Static HIGH | 0 | 0 | ACT | 0 | 0 | 1 | 1 | 0 | 0 | 0 | 0 | 0 | 0 | 0 | – |
| | | | 1 | RDA | 0 | 1 | 0 | 1 | 0 | 0 | 0 | 1 | 0 | 0 | 0 | 00000000 |
| | | | 2 | D | 1 | 0 | 0 | 0 | 0 | 0 | 0 | 0 | 0 | 0 | 0 | – |
| | | | 3 | Repeat cycle 2 until nRRD - 1 | | | | | | | | | | | | |
| | | 1 | nRRD | ACT | 0 | 0 | 1 | 1 | 0 | 1 | 0 | 0 | 0 | F | 0 | – |
| | | | nRRD + 1 | RDA | 0 | 1 | 0 | 1 | 0 | 1 | 0 | 1 | 0 | F | 0 | 00110011 |
| | | | nRRD + 2 | D | 1 | 0 | 0 | 0 | 0 | 1 | 0 | 0 | 0 | F | 0 | – |
| | | | nRRD + 3 | Repeat cycle nRRD + 2 until 2 × nRRD - 1 | | | | | | | | | | | | |
| | | 2 | 2 × nRRD | Repeat sub-loop 0, use BA[2:0] = 2 | | | | | | | | | | | | |
| | | 3 | 3 × nRRD | Repeat sub-loop 1, use BA[2:0] = 3 | | | | | | | | | | | | |
| | | 4 | 4 × nRRD | D | 1 | 0 | 0 | 0 | 0 | 3 | 0 | 0 | 0 | F | 0 | – |
| | | | 4 × nRRD + 1 | Repeat cycle 4 × nRRD until nFAW - 1, if needed | | | | | | | | | | | | |
| | | 5 | nFAW | Repeat sub-loop 0, use BA[2:0] = 4 | | | | | | | | | | | | |
| | | 6 | nFAW + nRRD | Repeat sub-loop 1, use BA[2:0] = 5 | | | | | | | | | | | | |
| | | 7 | nFAW + 2 × nRRD | Repeat sub-loop 0, use BA[2:0] = 6 | | | | | | | | | | | | |
| | | 8 | nFAW + 3 × nRRD | Repeat sub-loop 1, use BA[2:0] = 7 | | | | | | | | | | | | |
| | | 9 | nFAW + 4 × nRRD | D | 1 | 0 | 0 | 0 | 0 | 7 | 0 | 0 | 0 | F | 0 | – |
| | | | nFAW + 4 × nRRD + 1 | Repeat cycle nFAW + 4 × nRRD until 2 × nFAW - 1, if needed | | | | | | | | | | | | |
| | | 10 | 2 × nFAW | ACT | 0 | 0 | 1 | 1 | 0 | 0 | 0 | 0 | 0 | F | 0 | – |
| | | | 2 × nFAW + 1 | RDA | 0 | 1 | 0 | 1 | 0 | 0 | 0 | 1 | 0 | F | 0 | 00110011 |
| | | | 2 × nFAW + 2 | D | 1 | 0 | 0 | 0 | 0 | 0 | 0 | 0 | 0 | F | 0 | – |
| | | | 2 × nFAW + 3 | Repeat cycle 2 × nFAW + 2 until 2 × nFAW + nRRD - 1 | | | | | | | | | | | | |
| | | 11 | 2 × nFAW + nRRD | ACT | 0 | 0 | 1 | 1 | 0 | 1 | 0 | 0 | 0 | 0 | 0 | – |
| | | | 2 × nFAW + nRRD + 1 | RDA | 0 | 1 | 0 | 1 | 0 | 1 | 0 | 1 | 0 | 0 | 0 | 00000000 |
| | | | 2 × nFAW + nRRD + 2 | D | 1 | 0 | 0 | 0 | 0 | 1 | 0 | 0 | 0 | 0 | 0 | – |
| | | | 2 × nFAW + nRRD + 3 | Repeat cycle 2 × nFAW + nRRD + 2 until 2 × nFAW + 2 × nRRD - 1 | | | | | | | | | | | | |
| | | 12 | 2 × nFAW + 2 × nRRD | Repeat sub-loop 10, use BA[2:0] = 2 | | | | | | | | | | | | |
| | | 13 | 2 × nFAW + 3 × nRRD | Repeat sub-loop 11, use BA[2:0] = 3 | | | | | | | | | | | | |
| | | 14 | 2 × nFAW + 4 × nRRD | D | 1 | 0 | 0 | 0 | 0 | 3 | 0 | 0 | 0 | 0 | 0 | – |
| | | | 2 × nFAW + 4 × nRRD + 1 | Repeat cycle 2 × nFAW + 4 × nRRD until 3 × nFAW - 1, if needed | | | | | | | | | | | | |
| | | 15 | 3 × nFAW | Repeat sub-loop 10, use BA[2:0] = 4 | | | | | | | | | | | | |

**DDR3L $I_{DD7}$ Measurement Loop (Continued)**

| CK, CK# | CKE | Sub-Loop | Cycle Number | Command | CS# | RAS# | CAS# | WE# | ODT | BA[2:0] | A[15:11] | A[10] | A[9:7] | A[6:3] | A[2:0] | Data[3] |
|---|---|---|---|---|---|---|---|---|---|---|---|---|---|---|---|---|
| Toggling | Static HIGH | 16 | 3 × nFAW + nRRD | Repeat sub-loop 11, use BA[2:0] = 5 | | | | | | | | | | | | |
| | | 17 | 3 × nFAW + 2 × nRRD | Repeat sub-loop 10, use BA[2:0] = 6 | | | | | | | | | | | | |
| | | 18 | 3 × nFAW + 3 × nRRD | Repeat sub-loop 11, use BA[2:0] = 7 | | | | | | | | | | | | |
| | | 19 | 3 × nFAW + 4 × nRRD | D | 1 | 0 | 0 | 0 | 0 | 7 | 0 | 0 | 0 | 0 | 0 | – |
| | | | 3 × nFAW + 4 × nRRD + 1 | Repeat cycle 3 × nFAW + 4 × nRRD until 4 × nFAW - 1, if needed | | | | | | | | | | | | |

**Note:**

1. DQ, DQS, DQS# are midlevel unless driven as required by the RD command.
2. DM is LOW.
3. Burst sequence is driven on each DQ signal by the RD command.
4. AL = CL-1.

## Electrical Characteristics – $I_{DD}$ Specifications

### $I_{DD}$ Maximum Limits

| Speed Bin | | DDR3/3L-1866 | DDR3/3L-2133 | Units | Notes |
|---|---|---|---|---|---|
| $I_{DD}$ | Width | | | | |
| $I_{DD0}$ | x16 | 32 | 34 | mA | 1, 2 |
| $I_{DD1}$ | x16 | 46 | 54 | mA | 1, 2 |
| $I_{DD2P0}$ (Slow) | All | 12 | 12 | mA | 1, 2 |
| $I_{DD2P1}$ (Fast) | All | 12 | 14 | mA | 1, 2 |
| $I_{DD2Q}$ | All | 15 | 17 | mA | 1, 2 |
| $I_{DD2N}$ | All | 17 | 22 | mA | 1, 2 |
| $I_{DD2NT}$ | x16 | 23 | 28 | mA | 1, 2 |
| $I_{DD3P}$ | All | 17 | 19 | mA | 1, 2 |
| $I_{DD3N}$ | x16 | 23 | 25 | mA | 1, 2 |
| $I_{DD4R}$ | x16 | 120 | 130 | mA | 1, 2 |
| $I_{DD4W}$ | x16 | 130 | 140 | mA | 1, 2 |
| $I_{DD5B}$ | All | 156 | 160 | mA | 1, 2 |
| $I_{DD6}$ | All | 15 | 15 | mA | 1, 2, 3 |
| $I_{DD6ET}$ | All | 23 | 23 | mA | 2, 4 |
| $I_{DD7}$ | x16 | 147 | 160 | mA | 1, 2 |
| $I_{DD8}$ | All | $I_{DD2P0}$ + 2mA | $I_{DD2P0}$ + 2mA | mA | 1, 2 |

**Note:**

1. $T_C$ = 85°C; SRT and ASR are disabled.
2. Enabling ASR could increase $I_{DDx}$ by up to an additional 2mA.
3. Restricted to $T_C$ (MAX) = 85°C.
4. $T_C$ = 85°C; ASR and ODT are disabled; SRT is enabled.
5. The $I_{DD}$ values must be derated (increased) on IT-option devices when operated outside of the range 0°C ≤ $T_C$ ≤ +85°C:

   5a. When $T_C$ < 0°C: $I_{DD2P0}$, $I_{DD2P1}$ and $I_{DD3P}$ must be derated by 4%; $I_{DD4R}$ and $I_{DD4W}$ must be derated by 2%; and $I_{DD6}$, $I_{DD6ET}$ and $I_{DD7}$ must be derated by 7%.

   5b. When $T_C$ > 85°C: $I_{DD0}$, $I_{DD1}$, $I_{DD2N}$, $I_{DD2NT}$, $I_{DD2Q}$, $I_{DD3N}$, $I_{DD3P}$, $I_{DD4R}$, $I_{DD4W}$, and $I_{DD5B}$ must be derated by 2%; $I_{DD2Px}$ must be derated by 30%.

# Electrical Specifications – DC and AC

## DC Operating Conditions

### DDR3L 1.35V DC Electrical Characteristics and Operating Conditions

All voltages are referenced to $V_{SS}$

| Parameter/Condition | Symbol | Min | Nom | Max | Unit | Notes |
|---|---|---|---|---|---|---|
| Supply voltage | $V_{DD}$ | 1.283 | 1.35 | 1.45 | V | 1–7 |
| I/O supply voltage | $V_{DDQ}$ | 1.283 | 1.35 | 1.45 | V | 1–7 |
| Input leakage current<br>Any input 0V ≤ $V_{IN}$ ≤ $V_{DD}$, $V_{REF}$ pin 0V ≤ $V_{IN}$ ≤ 1.1V (All other pins not under test = 0V) | $I_I$ | –2 | – | 2 | µA | |
| $V_{REF}$ supply leakage current $V_{REFDQ}$ = $V_{DD}$/2<br>or $V_{REFCA}$ = $V_{DD}$/2<br>(All other pins not under test = 0V) | $I_{VREF}$ | –1 | – | 1 | µA | 8, 9 |

**Note:**

1. $V_{DD}$ and $V_{DDQ}$ must track one another. $V_{DDQ}$ must be ≤ $V_{DD}$. $V_{SS}$ = $V_{SSQ}$.
2. $V_{DD}$ and $V_{DDQ}$ may include AC noise of ±50mV (250 kHz to 20 MHz) in addition to the DC (0 Hz to 250 kHz) specifications. $V_{DD}$ and $V_{DDQ}$ must be at same level for valid AC timing parameters.
3. Maximum DC value may not be greater than 1.425V. The DC value is the linear average of $V_{DD}$/$V_{DDQ}$(t) over a very long period of time (for example, 1 second).
4. Under these supply voltages, the device operates to this DDR3L specification.
5. If the maximum limit is exceeded, input levels shall be governed by DDR3 specifications.
6. Under 1.5V operation, this DDR3L device operates in accordance with the DDR3 specifications under the same speed timings as defined for this device.
7. Once initialized for DDR3L operation, DDR3 operation may only be used if the device is in reset while $V_{DD}$ and $V_{DDQ}$ are changed for DDR3 operation (see $V_{DD}$ Voltage Switching).
8. The minimum limit requirement is for testing purposes. The leakage current on the $V_{REF}$ pin should be minimal.
9. $V_{REF}$ (see DDR3L 1.35V DC Electrical Characteristics and Input Conditions table).

## Input Operating Conditions

### DDR3L 1.35V DC Electrical Characteristics and Input Conditions

All voltages are referenced to $V_{SS}$

| Parameter/Condition | Symbol | Min | Nom | Max | Unit | Notes |
|---|---|---|---|---|---|---|
| $V_{IN}$ low; DC/commands/address busses | $V_{IL}$ | $V_{SS}$ | N/A | See Command and Address table | V | |
| $V_{IN}$ high; DC/commands/address busses | $V_{IH}$ | See Command and Address table | N/A | $V_{DD}$ | V | |
| Input reference voltage command/address bus | $V_{REFCA(DC)}$ | 0.49 × $V_{DD}$ | 0.5 × $V_{DD}$ | 0.51 × $V_{DD}$ | V | 1, 2 |
| I/O reference voltage DQ bus | $V_{REFDQ(DC)}$ | 0.49 × $V_{DD}$ | 0.5 × $V_{DD}$ | 0.51 × $V_{DD}$ | V | 2, 3 |
| I/O reference voltage DQ bus in SELF REFRESH | $V_{REFDQ(SR)}$ | $V_{SS}$ | 0.5 × $V_{DD}$ | $V_{DD}$ | V | 4 |
| Command/address termination voltage (system level, not direct DRAM input) | $V_{TT}$ | – | 0.5 × $V_{DDQ}$ | – | V | 5 |

**Note:**

1. $V_{REFCA(DC)}$ is expected to be approximately 0.5 × $V_{DD}$ and to track variations in the DC level. Externally generated peak noise (non-common mode) on $V_{REFCA}$ may not exceed ±1% × $V_{DD}$ around the $V_{REFCA(DC)}$ value. Peak-to-peak AC noise on $V_{REFCA}$ should not ex- ceed ±2% of $V_{REFCA(DC)}$.
2. DC values are determined to be less than 20 MHz in frequency. DRAM must meet specifi- cations if the DRAM induces additional AC noise greater than 20 MHz in frequency.
3. $V_{REFDQ(DC)}$ is expected to be approximately 0.5 × $V_{DD}$ and to track variations in the DC level. Externally generated peak noise (non-common mode) on $V_{REFDQ}$ may not exceed ±1% × $V_{DD}$ around the $V_{REFDQ(DC)}$ value. Peak-to-peak AC noise on $V_{REFDQ}$ should not ex- ceed ±2% of $V_{REFDQ(DC)}$.
4. $V_{REFDQ(DC)}$ may transition to $V_{REFDQ(SR)}$ and back to $V_{REFDQ(DC)}$ when in SELF REFRESH, within restrictions outlined in the SELF REFRESH section.
5. $V_{TT}$ is not applied directly to the device. $V_{TT}$ is a system supply for signal termination re- sistors. Minimum and maximum values are system-dependent.

## DDR3L 1.35V Input Switching Conditions - Command and Address

| Parameter/Condition | Symbol | DDR3L-1866/2133 | Units |
|---|---|---|---|
| **Command and Address** | | | |
| Input high AC voltage: Logic 1 | $V_{IH(AC160),min}$[5] | – | mV |
| | $V_{IH(AC135),min}$[5] | 135 | mV |
| | $V_{IH(AC125,)min}$[5] | 125 | mV |
| Input high DC voltage: Logic 1 | $V_{IH(DC90),min}$ | 90 | mV |
| Input low DC voltage: Logic 0 | $V_{IL(DC90),min}$ | –90 | mV |
| Input low AC voltage: Logic 0 | $V_{IL(AC125),min}$[5] | –125 | mV |
| | $V_{IL(AC135),min}$[5] | –135 | mV |
| | $V_{IL(AC160),min}$[5] | – | mV |
| **DQ and DM** | | | |
| Input high AC voltage: Logic 1 | $V_{IH(AC160),min}$[5] | – | mV |
| | $V_{IH(AC135),min}$[5] | 135 | mV |
| | $V_{IH(AC125),min}$[5] | 130 | mV |
| Input high DC voltage: Logic 1 | $V_{IH(DC90),min}$ | 90 | mV |
| Input low DC voltage: Logic 0 | $V_{IL(DC90),min}$ | –90 | mV |
| Input low AC voltage: Logic 0 | $V_{IL(AC125),min}$[5] | –130 | mV |
| | $V_{IL(AC135),min}$[5] | –135 | mV |
| | $V_{IL(AC160),min}$[5] | – | mV |

**Note:**

1. All voltages are referenced to $V_{REF}$. $V_{REF}$ is $V_{REFCA}$ for control, command, and address. All slew rates and setup/hold times are specified at the DRAM ball. $V_{REF}$ is $V_{REFDQ}$ for DQ and DM inputs.
2. Input setup timing parameters ($t_{IS}$ and $t_{DS}$) are referenced at $V_{IL(AC)}/V_{IH(AC)}$, not $V_{REF(DC)}$.
3. Input hold timing parameters ($t_{IH}$ and $t_{DH}$) are referenced at $V_{IL(DC)}/V_{IH(DC)}$, not $V_{REF(DC)}$.
4. Single-ended input slew rate = 1 V/ns; maximum input voltage swing under test is 900mV (peak-to-peak).
5. When two $V_{IH(AC)}$ values (and two corresponding $V_{IL(AC)}$ values) are listed for a specific speed bin, the user may choose either value for the input AC level. Whichever value is used, the associated setup time for that AC level must also be used. Additionally, one $V_{IH(AC)}$ value may be used for address/command inputs and the other $V_{IH(AC)}$ value may be used for data inputs.

   For example, for DDR3-800, two input AC levels are defined: $V_{IH(AC160),min}$ and $V_{IH(AC135),min}$ (corresponding $V_{IL(AC160),min}$ and $V_{IL(AC135),min}$). For DDR3-800, the address/ command inputs must use either $V_{IH(AC160),min}$ with $t_{IS}$(AC160) of 210ps or $V_{IH(AC150),min}$ with $t_{IS}$(AC135) of 365ps; independently, the data inputs must use either $V_{IH(AC160),min}$ with $t_{DS}$(AC160) of 75ps or $V_{IH(AC150),min}$ with $t_{DS}$(AC150) of 125ps.

## DDR3L 1.35V Differential Input Operating Conditions (CK, CK# and DQS, DQS#)

| Parameter/Condition | Symbol | Min | Max | Units | Notes |
|---|---|---|---|---|---|
| Differential input logic high – slew | $V_{IH,diff(AC)slew}$ | 180 | N/A | mV | 4 |
| Differential input logic low – slew | $V_{IL,diff(AC)slew}$ | N/A | –180 | mV | 4 |
| Differential input logic high | $V_{IH,diff(AC)}$ | $2 \times (V_{IH(AC)} - V_{REF})$ | $V_{DD}/V_{DDQ}$ | mV | 5 |
| Differential input logic low | $V_{IL,diff(AC)}$ | $V_{SS}/V_{SSQ}$ | $2 \times (V_{IL(AC)} - V_{REF})$ | mV | 6 |
| Differential input crossing voltage relative to $V_{DD}/2$ for DQS, DQS#; CK, CK# | $V_{IX}$ | $V_{REF(DC)}$ - 150 | $V_{REF(DC)}$ + 150 | mV | 5, 7, 9 |
| Differential input crossing voltage relative to $V_{DD}/2$ for CK, CK# | $V_{IX}$ (175) | $V_{REF(DC)}$ - 175 | $V_{REF(DC)}$ + 175 | mV | 5, 7–9 |
| Single-ended high level for strobes | $V_{SEH}$ | $V_{DDQ}/2$ + 160 | $V_{DDQ}$ | mV | 5 |
| Single-ended high level for CK, CK# | | $V_{DD}/2$ + 160 | $V_{DD}$ | mV | 5 |
| Single-ended low level for strobes | $V_{SEL}$ | $V_{SSQ}$ | $V_{DDQ}/2$ - 160 | mV | 6 |
| Single-ended low level for CK, CK# | | $V_{SS}$ | $V_{DD}/2$ - 160 | mV | 6 |

**Note:**

1. Clock is referenced to $V_{DD}$ and $V_{SS}$. Data strobe is referenced to $V_{DDQ}$ and $V_{SSQ}$.
2. Reference is $V_{REFCA(DC)}$ for clock and $V_{REFDQ(DC)}$ for strobe.
3. Differential input slew rate = 2 V/ns.
4. Defines slew rate reference points, relative to input crossing voltages.
5. Minimum DC limit is relative to single-ended signals; overshoot specifications are applicable.
6. Maximum DC limit is relative to single-ended signals; undershoot specifications are applicable.
7. The typical value of $V_{IX(AC)}$ is expected to be about 0.5 × $V_{DD}$ of the transmitting device, and $V_{IX(AC)}$ is expected to track variations in $V_{DD}$. $V_{IX(AC)}$ indicates the voltage at which differential input signals must cross.
8. The $V_{IX}$ extended range (±175mV) is allowed only for the clock; this $V_{IX}$ extended range is only allowed when the following conditions are met: The single-ended input signals are monotonic, have the single-ended swing $V_{SEL}$, $V_{SEH}$ of at least $V_{DD}/2$ ±250mV, and the differential slew rate of CK, CK# is greater than 3 V/ns.
9. $V_{IX}$ must provide 25mV (single-ended) of the voltages separation.

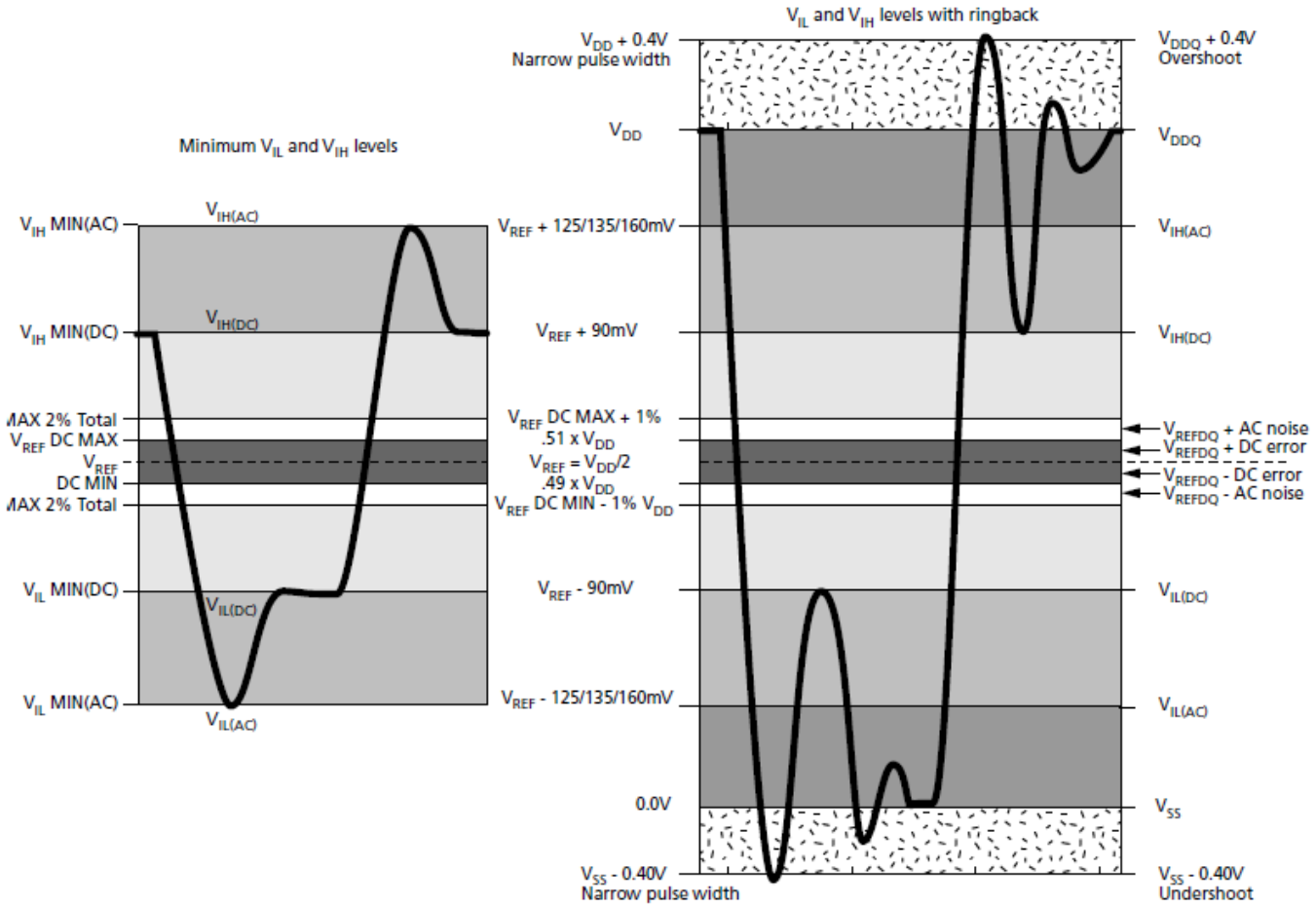


Note: 1. Numbers in diagrams reflect nominal values.

**DDR3L 1.35V Input Signal**

## DDR3L 1.35V AC Overshoot/Undershoot Specification

### DDR3L Control and Address Pins

| Parameter | DDR3L-1866 | DDR3L-2133 |
|---|---|---|
| Maximum peak amplitude allowed for overshoot area (see Overshoot figure) | 0.4V | 0.4V |
| Maximum peak amplitude allowed for undershoot area (see Undershoot figure) | 0.4V | 0.4V |
| Maximum overshoot area above $V_{DD}$ (see Overshoot figure) | 0.28 Vns | 0.25 Vns |
| Maximum undershoot area below $V_{SS}$ (see Undershoot figure) | 0.28 Vns | 0.25 Vns |

### DDR3L 1.35V Clock, Data, Strobe, and Mask Pins

| Parameter | DDR3L-1866 | DDR3L-2133 |
|---|---|---|
| Maximum peak amplitude allowed for overshoot area (see Overshoot figure) | 0.4V | 0.4V |
| Maximum peak amplitude allowed for undershoot area (see Undershoot figure) | 0.4V | 0.4V |
| Maximum overshoot area above VDD/VDDQ (see Overshoot figure) | 0.11 Vns | 0.10 Vns |
| Maximum undershoot area below VSS/VSSQ (see Undershoot figure) | 0.11 Vns | 0.10 Vns |

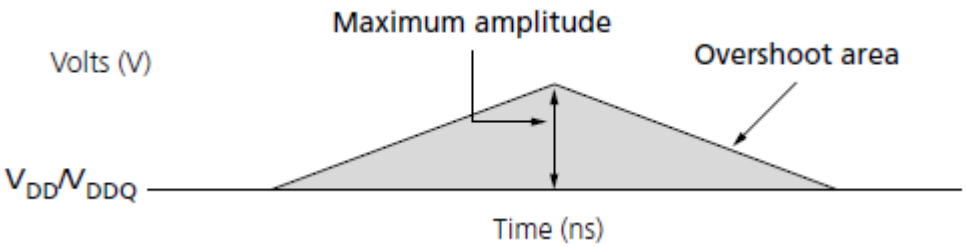


**Overshoot**

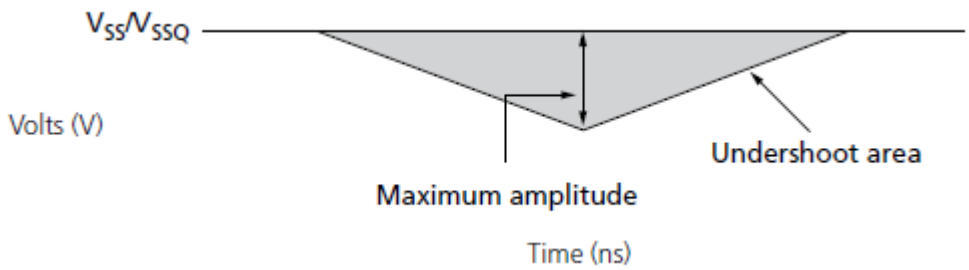


**Undershoot**

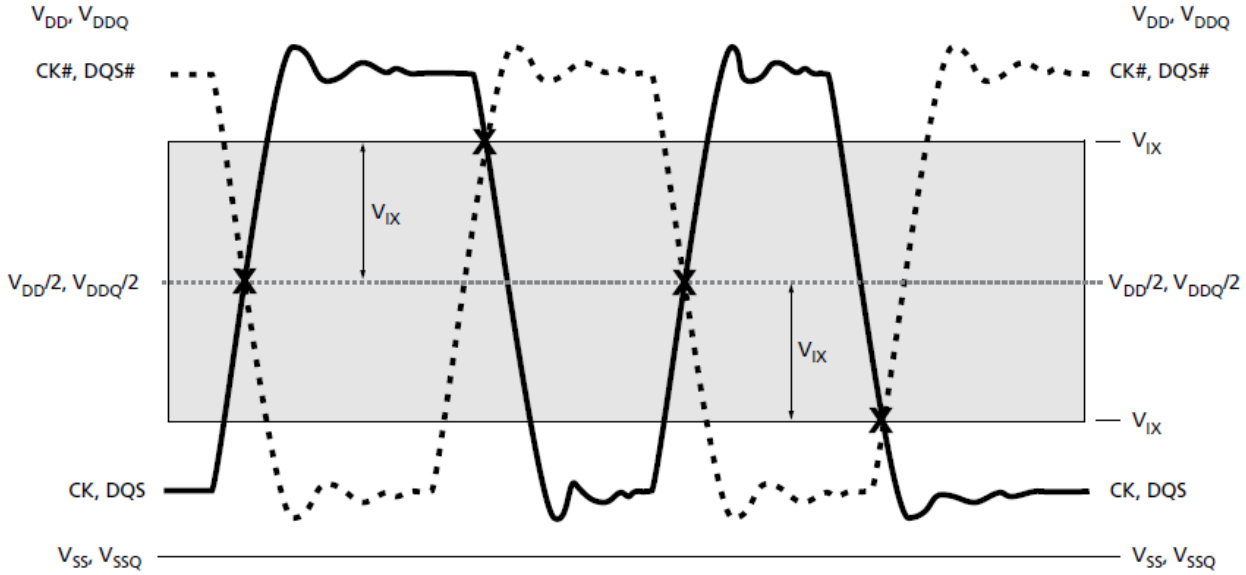


**$V_{IX}$ for Differential Signals**

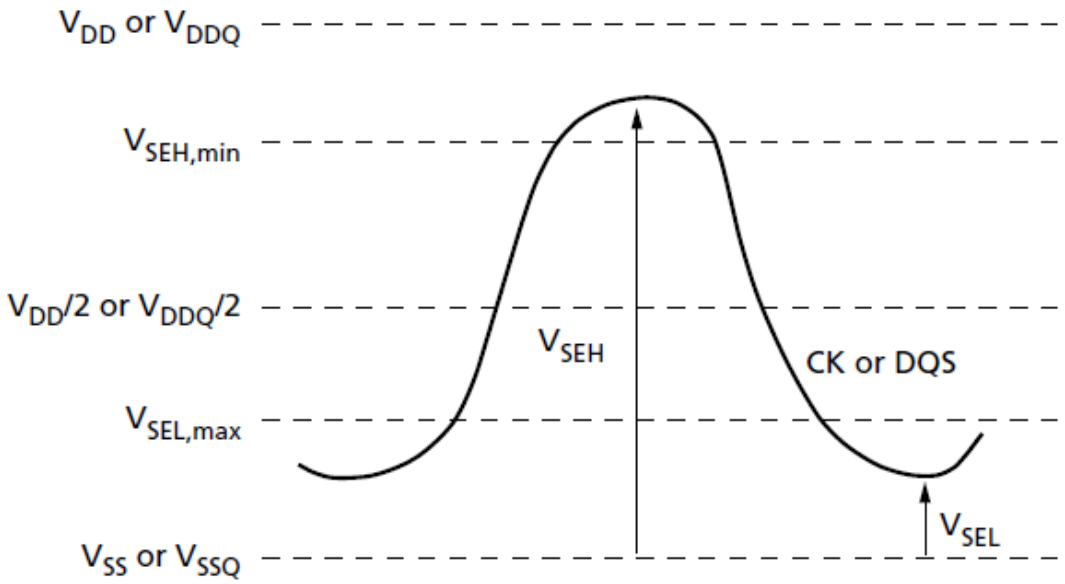


**Single-Ended Requirements for Differential Signals**

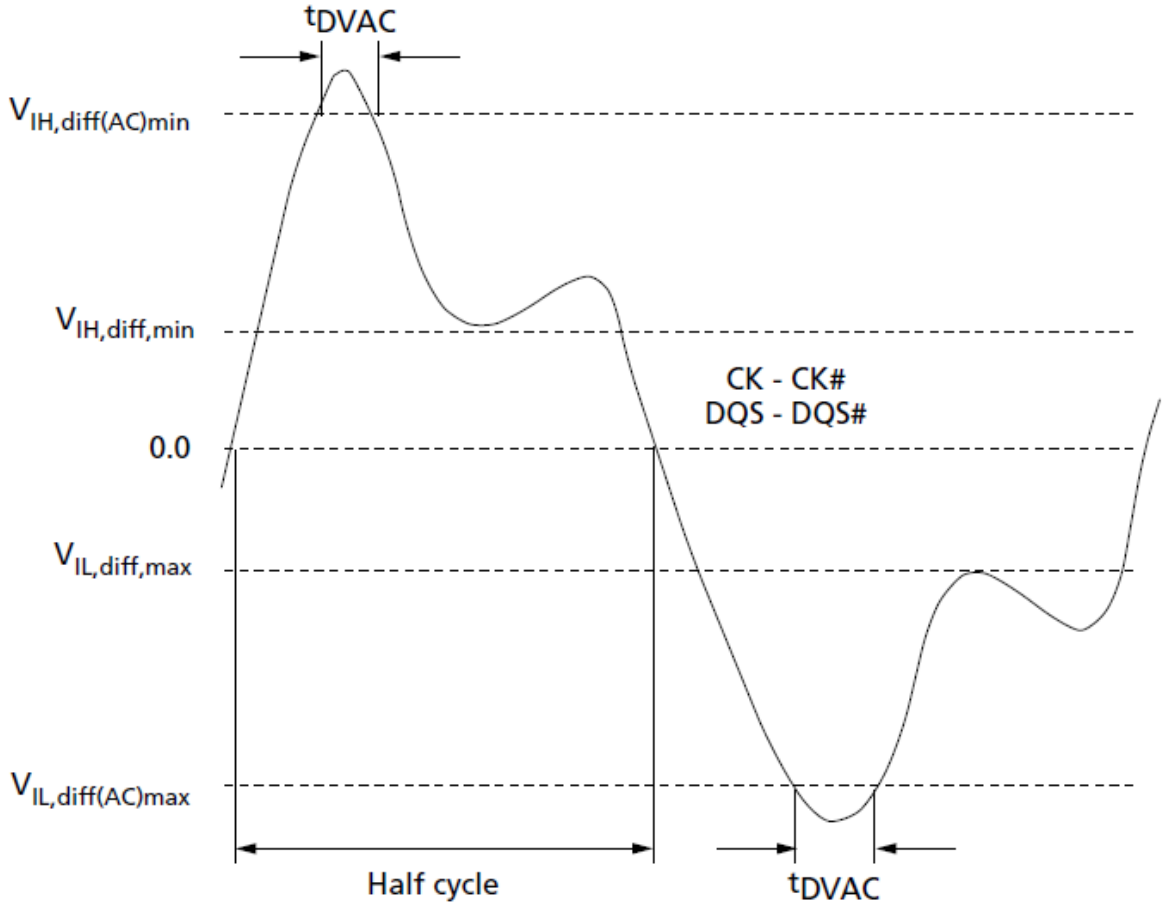


**Definition of Differential AC-Swing and tDVAC**

**DDR3L 1.35V - Minimum Required Time tDVAC for CK/CK#, DQS/DQS# Differential for AC Ringback**

| Slew Rate (V/ns) | DDR3L-1866/2133 | | |
|---|---|---|---|
| | tDVAC at 270mV (ps) | tDVAC at 250mV (ps) | tDVAC at 260mV (ps) |
| >4.0 | 163 | 168 | 176 |
| 4.0 | 163 | 168 | 176 |
| 3.0 | 140 | 147 | 154 |
| 2.0 | 95 | 105 | 111 |
| 1.8 | 80 | 91 | 97 |
| 1.6 | 62 | 74 | 78 |
| 1.4 | 37 | 52 | 55 |
| 1.2 | 5 | 22 | 24 |
| 1.0 | Note1 | | |
| <1.0 | Note1 | | |

**Note:** 1. Rising input signal shall become equal to or greater than $V_{IH(AC)}$ level and Falling input signal shall become equal to or less than $V_{IL(AC)}$ level.

## DDR3L 1.35V Slew Rate Definitions for Single-Ended Input Signals

Setup ($^{t}$IS and $^{t}$DS) nominal slew rate for a rising signal is defined as the slew rate between the last crossing of $V_{REF}$ and the first crossing of $V_{IH(AC)min}$. Setup ($^{t}$IS and $^{t}$DS) nominal slew rate for a falling signal is defined as the slew rate between the last crossing of $V_{REF}$ and the first crossing of $V_{IL(AC)max}$.

Hold ($^{t}$IH and $^{t}$DH) nominal slew rate for a rising signal is defined as the slew rate between the last crossing of $V_{IL(DC)max}$ and the first crossing of $V_{REF}$. Hold ($^{t}$IH and $^{t}$DH) nominal slew rate for a falling signal is defined as the slew rate between the last crossing of $V_{IH(DC)min}$ and the first crossing of $V_{REF}$ (see Nominal Slew Rate Definition for Single-Ended Input Signals figure).

### Single-Ended Input Slew Rate Definition

| Input Slew Rates (Linear Signals) | | Measured | | Calculation |
|---|---|---|---|---|
| Input | Edge | From | To | |
| Setup | Rising | $V_{REF}$ | $V_{IH(AC),min}$ | $\frac{V_{IH(AC),min} - V_{REF}}{\Delta TRS_{se}}$ |
| | Falling | $V_{REF}$ | $V_{IL(AC),max}$ | $\frac{V_{REF} - V_{IL(AC),max}}{\Delta TFS_{se}}$ |
| Hold | Rising | $V_{IL(DC),max}$ | $V_{REF}$ | $\frac{V_{REF} - V_{IL(DC),max}}{\Delta TFH_{se}}$ |
| | Falling | $V_{IH(DC),min}$ | $V_{REF}$ | $\frac{V_{IH(DC),min} - V_{REF}}{\Delta TRSH_{se}}$ |

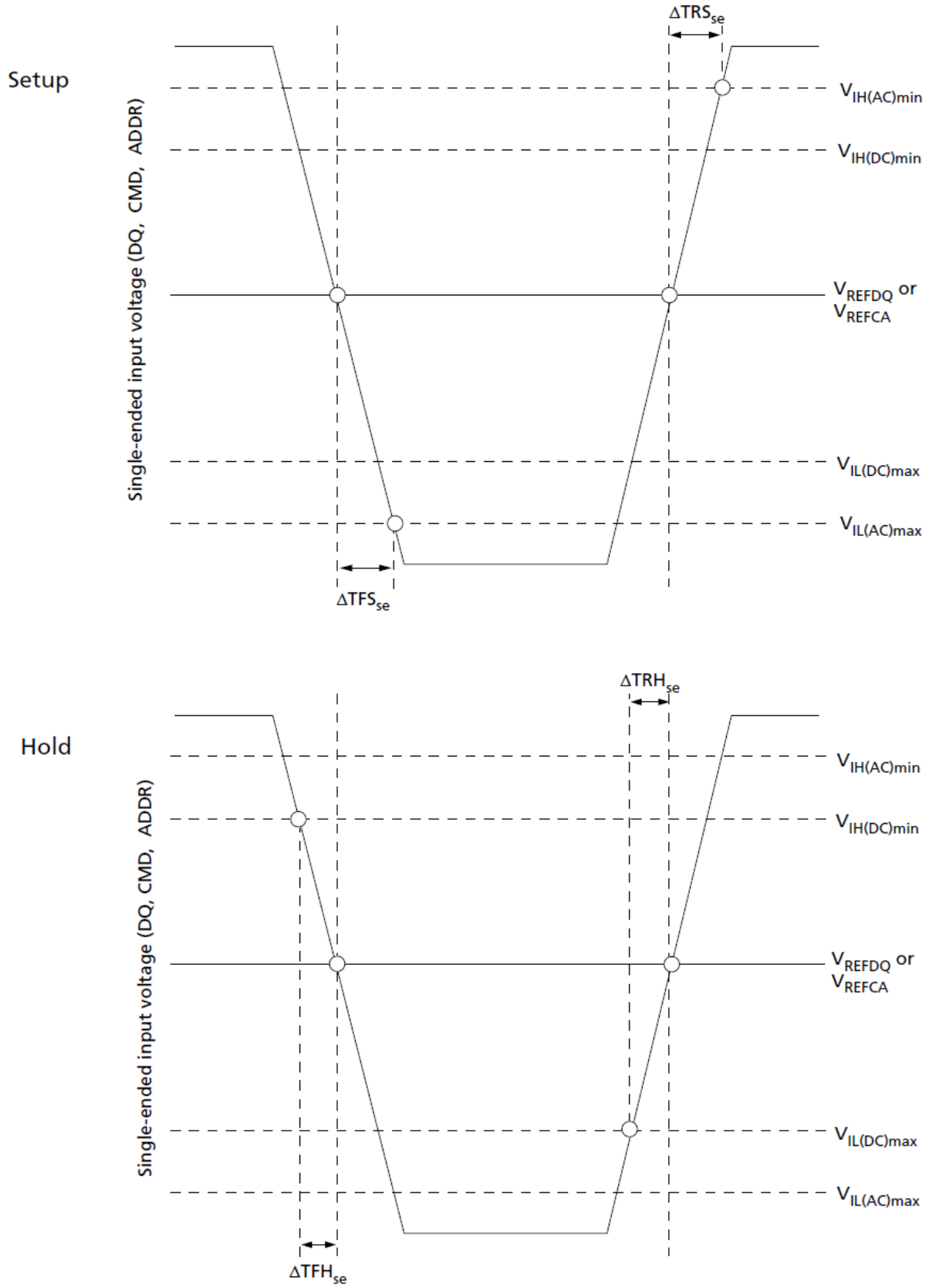


**Nominal Slew Rate Definition for Single-Ended Input Signals**

## DDR3L 1.35V Slew Rate Definitions for Differential Input Signals

Input slew rate for differential signals (CK, CK# and DQS, DQS#) are defined and meas- ured, as shown in Differential Input Slew Rate Definition table and Nominal Differential Input Slew Rate Definition for DQS, DQS# and CK, CK# figure. The nominal slew rate for a rising signal is defined as the slew rate between $V_{IL,diff,max}$ and $V_{IH,diff,min}$. The nominal slew rate for a falling signal is defined as the slew rate between $V_{IH,diff,min}$ and $V_{IL,diff,max}$.

### DDR3L 1.35V Differential Input Slew Rate Definition

| Differential Input Slew Rates (Linear Signals) | | Measured | | Calculation |
|---|---|---|---|---|
| Input | Edge | From | To | |
| CK and DQS reference | Rising | $V_{IL,diff,max}$ | $V_{IH,diff,min}$ | $\frac{V_{IH,diff,min} - V_{IL,diff,max}}{\Delta TR_{diff}}$ |
| | Falling | $V_{IH,diff,min}$ | $V_{IL,diff,max}$ | $\frac{V_{IH,diff,min} - V_{IL,diff,max}}{\Delta TF_{diff}}$ |

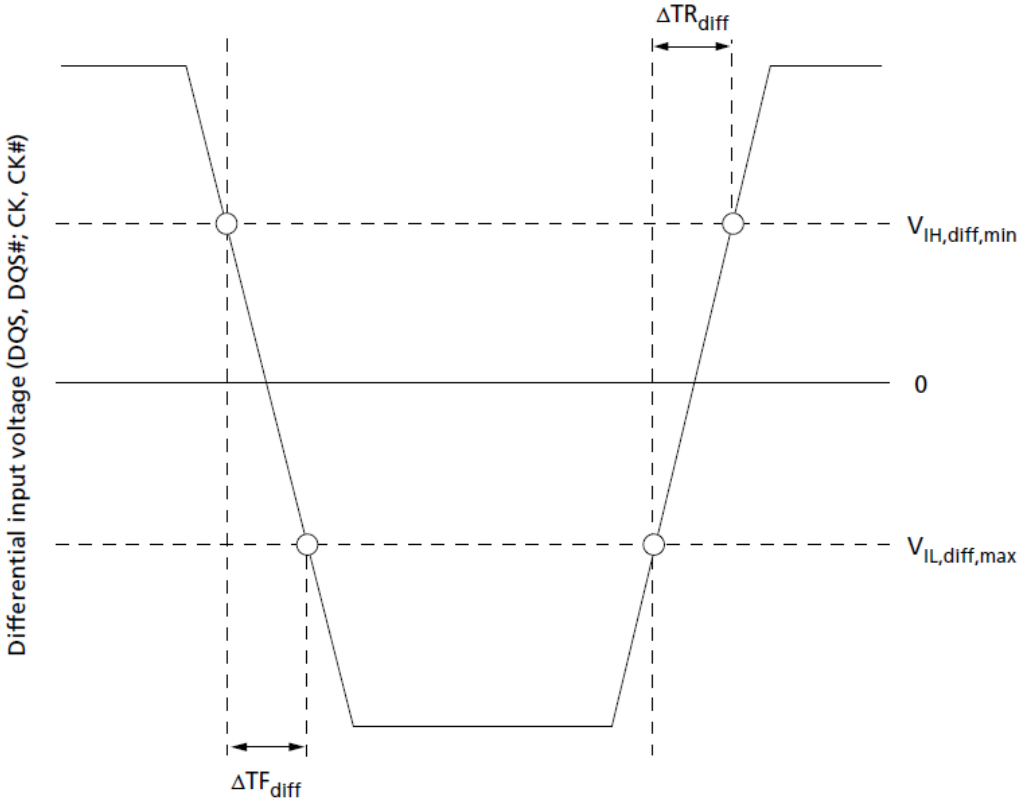


**DDR3L 1.35V Nominal Differential Input Slew Rate Definition for DQS, DQS# and CK, CK#**

## ODT Characteristics

The ODT effective resistance $R_{TT}$ is defined by MR1[9, 6, and 2]. ODT is applied to the DQ, DM, DQS and DQS#. The ODT target values and a functional representation are listed in On-Die Termination DC Electrical Characteristics and $R_{TT}$ Effective Impedance table. The individual pull-up and pull-down resistors ($R_{TT(PU)}$ and $R_{TT(PD)}$) are defined as follows:

- $R_{TT(PU)} = (V_{DDQ} - V_{OUT})/|I_{OUT}|$, under the condition that $R_{TT(PD)}$ is turned off
- $R_{TT(PD)} = (V_{OUT})/|I_{OUT}|$, under the condition that $R_{TT(PU)}$ is turned off

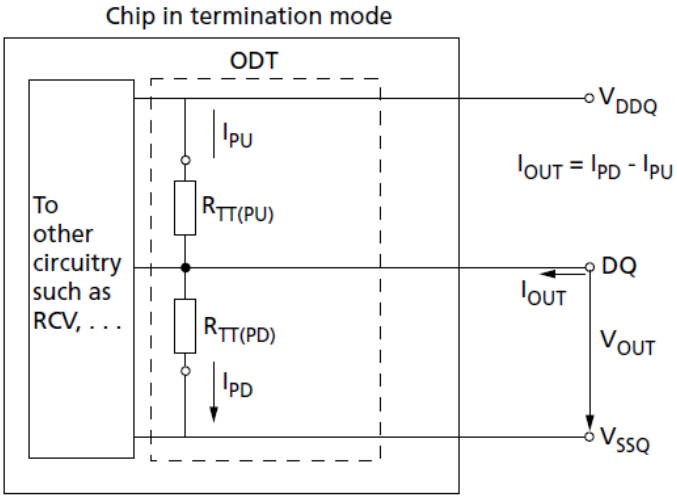


**ODT Levels and I-V Characteristics**

### On-Die Termination DC Electrical Characteristics

| Parameter/Condition | Symbol | Min | Nom | Max | Unit | Notes |
|---|---|---|---|---|---|---|
| $R_{TT}$ effective impedance | $R_{TT(EFF)}$ | See $R_{TT}$ Effective Impedance table | | | | 1, 2 |
| Deviation of VM with respect to $V_{DDQ}/2$ | ΔVM | –5 | | 5 | % | 1, 2, 3 |

**Note:**

1. Tolerance limits are applicable after proper ZQ calibration has been performed at a stable temperature and voltage ($V_{DDQ} = V_{DD}$, $V_{SSQ} = V_{SS}$). Refer to ODT Sensitivity if either the temperature or voltage changes after calibration.
2. Measurement definition for $R_{TT}$: Apply $V_{IH(AC)}$ to pin under test and measure current $I[V_{IH(AC)}]$, then apply $V_{IL(AC)}$ to pin under test and measure current $I[V_{IL(AC)}]$:

$$R_{TT} = \frac{V_{IH(AC)} - V_{IL(AC)}}{I(V_{IH(AC)}) - I(V_{IL(AC)})}$$

3. Measure voltage (VM) at the tested pin with no load:

$$\Delta VM = \left[ \frac{2 \times VM}{V_{DDQ}} - 1 \right] \times 100$$

## 1.35V ODT Resistors

$R_{TT}$ Effective Impedance table provides an overview of the ODT DC electrical characteristics. The values provided are not specification requirements; however, they can be used as design guidelines to indicate what $R_{TT}$ is targeted to provide:

- $R_{TT}$ 120Ω is made up of $R_{TT120(PD240)}$ and $R_{TT120(PU240)}$
- $R_{TT}$ 60Ω is made up of $R_{TT60(PD120)}$ and $R_{TT60(PU120)}$
- $R_{TT}$ 40Ω is made up of $R_{TT40(PD80)}$ and $R_{TT40(PU80)}$
- $R_{TT}$ 30Ω is made up of $R_{TT30(PD60)}$ and $R_{TT30(PU60)}$
- $R_{TT}$ 20Ω is made up of $R_{TT20(PD40)}$ and $R_{TT20(PU40)}$

**1.35V $R_{TT}$ Effective Impedance**

| MR1 [9, 6, 2] | RTT | Resistor | $V_{OUT}$ | Min | Nom | Max | Units |
|---|---|---|---|---|---|---|---|
| 0, 1, 0 | 120Ω | $R_{TT,120PD240}$ | 0.2 × $V_{DDQ}$ | 0.6 | 1.0 | 1.15 | RZQ/1 |
| | | | 0.5 × $V_{DDQ}$ | 0.9 | 1.0 | 1.15 | RZQ/1 |
| | | | 0.8 × $V_{DDQ}$ | 0.9 | 1.0 | 1.45 | RZQ/1 |
| | | $R_{TT,120PU240}$ | 0.2 × $V_{DDQ}$ | 0.9 | 1.0 | 1.45 | RZQ/1 |
| | | | 0.5 × $V_{DDQ}$ | 0.9 | 1.0 | 1.15 | RZQ/1 |
| | | | 0.8 × $V_{DDQ}$ | 0.6 | 1.0 | 1.15 | RZQ/1 |
| | 120Ω | | $V_{IL(AC)}$ to $V_{IH(AC)}$ | 0.9 | 1.0 | 1.65 | RZQ/2 |
| 0, 0, 1 | 60Ω | $R_{TT,60PD120}$ | 0.2 × $V_{DDQ}$ | 0.6 | 1.0 | 1.15 | RZQ/2 |
| | | | 0.5 × $V_{DDQ}$ | 0.9 | 1.0 | 1.15 | RZQ/2 |
| | | | 0.8 × $V_{DDQ}$ | 0.9 | 1.0 | 1.45 | RZQ/2 |
| | | $R_{TT,60PU120}$ | 0.2 × $V_{DDQ}$ | 0.9 | 1.0 | 1.45 | RZQ/2 |
| | | | 0.5 × $V_{DDQ}$ | 0.9 | 1.0 | 1.15 | RZQ/2 |
| | | | 0.8 × $V_{DDQ}$ | 0.6 | 1.0 | 1.15 | RZQ/2 |
| | 60Ω | | $V_{IL(AC)}$ to $V_{IH(AC)}$ | 0.9 | 1.0 | 1.65 | RZQ/4 |
| 0, 1, 1 | 40Ω | $R_{TT,40PD80}$ | 0.2 × $V_{DDQ}$ | 0.6 | 1.0 | 1.15 | RZQ/3 |
| | | | 0.5 × $V_{DDQ}$ | 0.9 | 1.0 | 1.15 | RZQ/3 |
| | | | 0.8 × $V_{DDQ}$ | 0.9 | 1.0 | 1.45 | RZQ/3 |
| | | $R_{TT,40PU80}$ | 0.2 × $V_{DDQ}$ | 0.9 | 1.0 | 1.45 | RZQ/3 |
| | | | 0.5 × $V_{DDQ}$ | 0.9 | 1.0 | 1.15 | RZQ/3 |
| | | | 0.8 × $V_{DDQ}$ | 0.6 | 1.0 | 1.15 | RZQ/3 |
| | 40Ω | | $V_{IL(AC)}$ to $V_{IH(AC)}$ | 0.9 | 1.0 | 1.65 | RZQ/6 |
| 1, 0, 1 | 30Ω | $R_{TT,30PD60}$ | 0.2 × $V_{DDQ}$ | 0.6 | 1.0 | 1.15 | RZQ/4 |
| | | | 0.5 × $V_{DDQ}$ | 0.9 | 1.0 | 1.15 | RZQ/4 |
| | | | 0.8 × $V_{DDQ}$ | 0.9 | 1.0 | 1.45 | RZQ/4 |
| | | $R_{TT,30PU60}$ | 0.2 × $V_{DDQ}$ | 0.9 | 1.0 | 1.45 | RZQ/4 |
| | | | 0.5 × $V_{DDQ}$ | 0.9 | 1.0 | 1.15 | RZQ/4 |
| | | | 0.8 × $V_{DDQ}$ | 0.6 | 1.0 | 1.15 | RZQ/4 |
| | 30Ω | | $V_{IL(AC)}$ to $V_{IH(AC)}$ | 0.9 | 1.0 | 1.65 | RZQ/8 |

**1.35V $R_{TT}$ Effective Impedance (Continued)**

| MR1 [9, 6, 2] | RTT | Resistor | VOUT | Min | Nom | Max | Units |
|---|---|---|---|---|---|---|---|
| 1, 0, 0 | 20Ω | $R_{TT,20PD40}$ | 0.2 × $V_{DDQ}$ | 0.6 | 1.0 | 1.15 | RZQ/6 |
| | | | 0.5 × $V_{DDQ}$ | 0.9 | 1.0 | 1.15 | RZQ/6 |
| | | | 0.8 × $V_{DDQ}$ | 0.9 | 1.0 | 1.45 | RZQ/6 |
| | | $R_{TT,20PU40}$ | 0.2 × $V_{DDQ}$ | 0.9 | 1.0 | 1.45 | RZQ/6 |
| | | | 0.5 × $V_{DDQ}$ | 0.9 | 1.0 | 1.15 | RZQ/6 |
| | | | 0.8 × $V_{DDQ}$ | 0.6 | 1.0 | 1.15 | RZQ/6 |
| | 20Ω | | $V_{IL(AC)}$ to $V_{IH(AC)}$ | 0.9 | 1.0 | 1.65 | RZQ/12 |

## ODT Sensitivity

If either the temperature or voltage changes after I/O calibration, then the tolerance limits listed in On-Die Termination DC Electrical Characteristics table and $R_{TT}$ Effective Impedance table can be expected to widen according to ODT Sensitivity Definition table and ODT Temperature and Voltage Sensitivity table.

**ODT Sensitivity Definition**

| Symbol | Min | Max | Unit |
|---|---|---|---|
| $R_{TT}$ | 0.9 - $dR_{TT}dT$ × \|DT\| - $dR_{TT}dV$ × \|DV\| | 1.6 + $dR_{TT}dT$ × \|DT\| + $dR_{TT}dV$ × \|DV\| | RZQ/(2, 4, 6, 8, 12) |

**Note:** 1. ΔT = T - T(@ calibration), ΔV = $V_{DDQ}$ - $V_{DDQ}$(@ calibration) and $V_{DD}$ = $V_{DDQ}$.

**ODT Temperature and Voltage Sensitivity**

| Change | Min | Max | Unit |
|---|---|---|---|
| $dR_{TT}dT$ | 0 | 1.5 | %/°C |
| $dR_{TT}dV$ | 0 | 0.15 | %/mV |

**Note:** 1. ΔT = T - T(@ calibration), ΔV = $V_{DDQ}$ - $V_{DDQ}$(@ calibration) and $V_{DD}$ = $V_{DDQ}$.

## ODT Timing Definitions

ODT loading differs from that used in AC timing measurements. The reference load for ODT timings is shown in ODT Timing Reference Load figure Two parameters define when ODT turns on or off synchronously, two define when ODT turns on or off asynchronously, and another defines when ODT turns on or off dynamically. ODT Timing Definitions table and Reference Settings for ODT Timing Measurements table outline and provide definition and measurement references settings for each parameter.

ODT turn-on time begins when the output leaves High-Z and ODT resistance begins to turn on. ODT turn-off time begins when the output leaves Low-Z and ODT resistance begins to turn off.

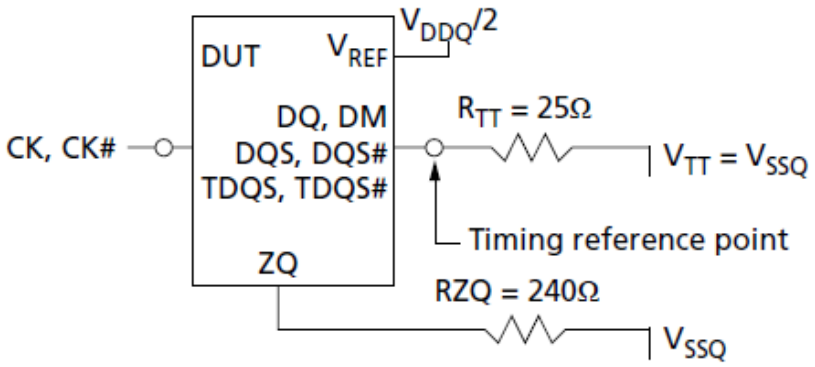


**ODT Timing Reference Load**

**ODT Timing Definitions**

| Symbol | Begin Point Definition | End Point Definition | Figure |
|---|---|---|---|
| $^{t}$AON | Rising edge of CK – CK# defined by the end point of ODTLon | Extrapolated point at $V_{SSQ}$ | $^{t}$AON and $^{t}$AOF Definitions |
| $^{t}$AOF | Rising edge of CK – CK# defined by the end point of ODTLoff | Extrapolated point at $V_{RTT,nom}$ | $^{t}$AON and $^{t}$AOF Definitions |
| $^{t}$AONPD | Rising edge of CK – CK# with ODT first being registered HIGH | Extrapolated point at $V_{SSQ}$ | $^{t}$AONPD and $^{t}$AOFPD Definitions |
| $^{t}$AOFPD | Rising edge of CK – CK# with ODT first being registered LOW | Extrapolated point at $V_{RTT,nom}$ | $^{t}$AONPD and $^{t}$AOFPD Definitions |
| $^{t}$ADC | Rising edge of CK – CK# defined by the end point of ODTLcnw, ODTLcwn4, or ODTLcwn8 | Extrapolated points at $V_{RTT(WR)}$ and $V_{RTT,nom}$ | $^{t}$AONPD and $^{t}$AOFPD Definitions |

**DDR3L(1.35V) Reference Settings for ODT Timing Measurements**

| Measured Parameter | $R_{TT,nom}$ Setting | $R_{TT(WR)}$ Setting | $V_{SW1}$ | $V_{SW2}$ |
|---|---|---|---|---|
| $^{t}$AON | RZQ/4 (60Ω) | N/A | 50mV | 100mV |
| | RZQ/12 (20Ω) | N/A | 100mV | 200mV |
| $^{t}$AOF | RZQ/4 (60Ω) | N/A | 50mV | 100mV |
| | RZQ/12 (20Ω) | N/A | 100mV | 200mV |
| $^{t}$AONPD | RZQ/4 (60Ω) | N/A | 50mV | 100mV |
| | RZQ/12 (20Ω) | N/A | 100mV | 200mV |
| $^{t}$AOFPD | RZQ/4 (60Ω) | N/A | 50mV | 100mV |
| | RZQ/12 (20Ω) | N/A | 100mV | 200mV |
| $^{t}$ADC | RZQ/12 (20Ω) | RZQ/2 (20Ω) | 200mV | 250mV |

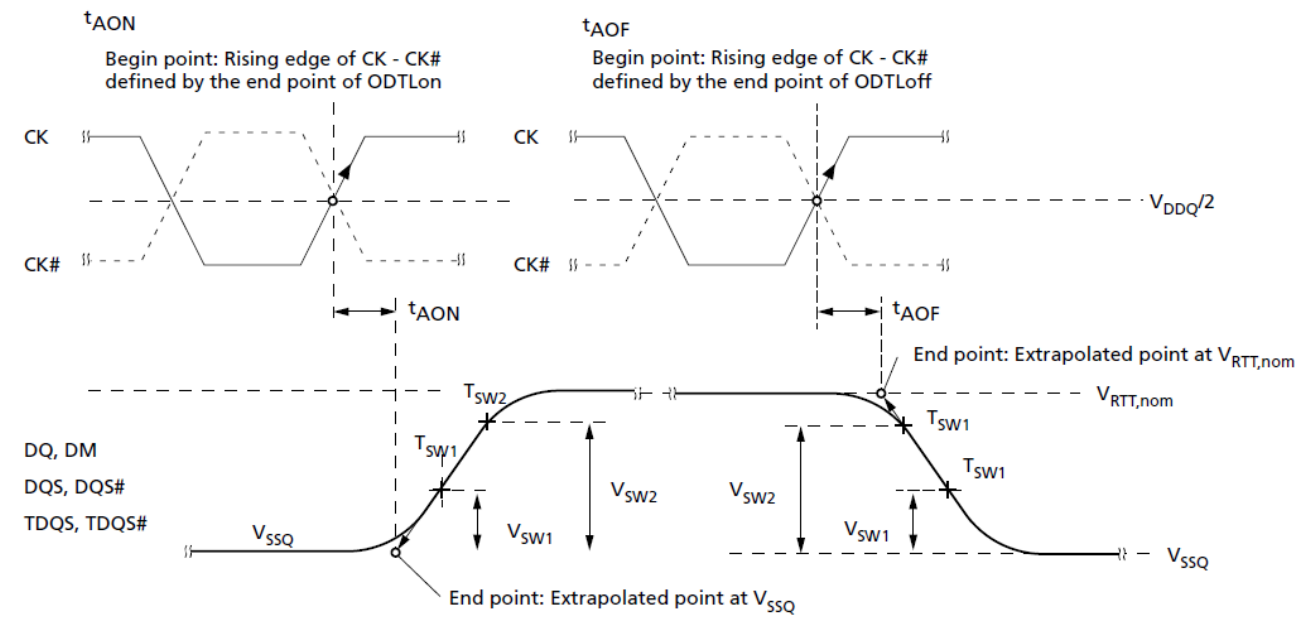


**tAON and tAOF Definitions**

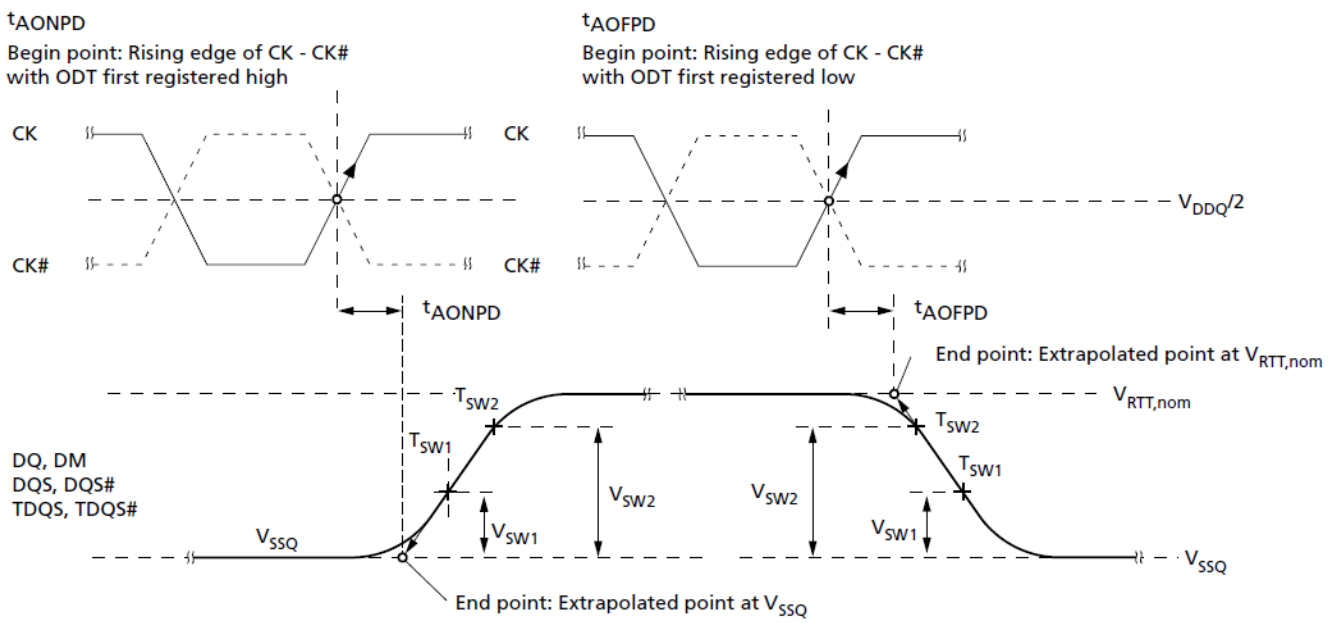


**tAONPD and tAOFPD Definitions**

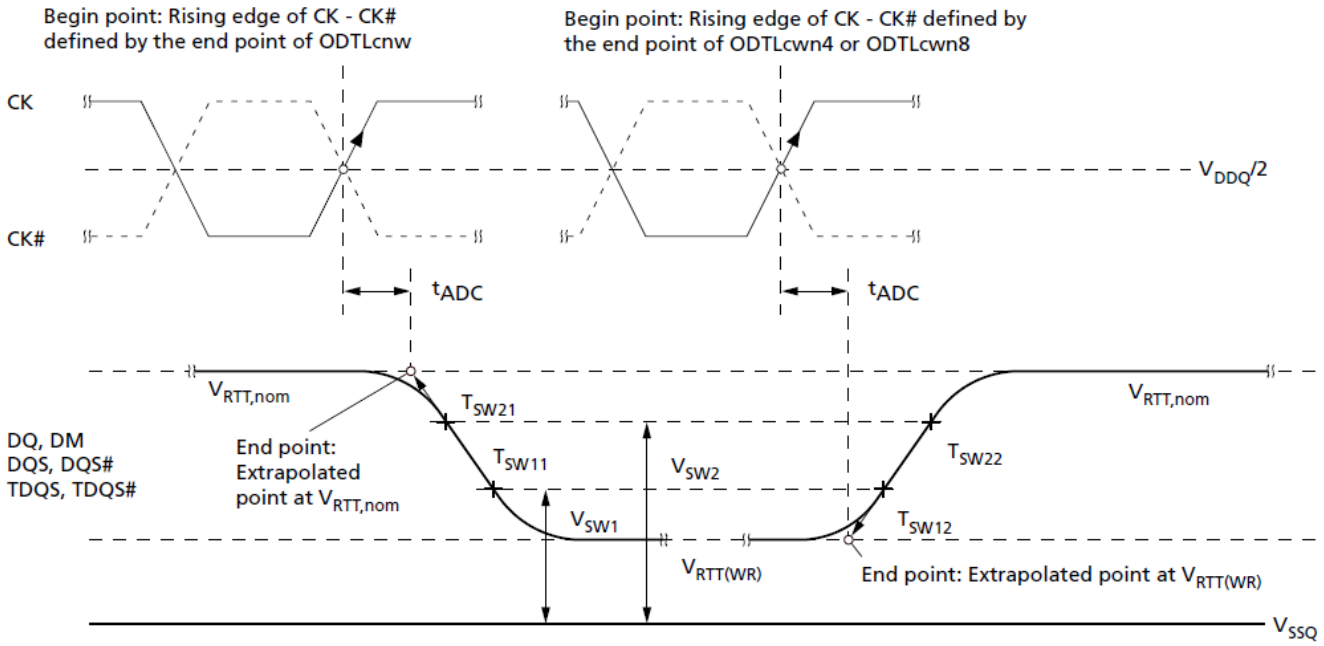


**$^{t}$ADC Definition**

## Output Driver Impedance

The output driver impedance is selected by MR1[5,1] during initialization. The selected value is able to maintain the tight tolerances specified if proper ZQ calibration is performed.

Output specifications refer to the default output driver unless specifically stated otherwise. A functional representation of the output buffer is shown below. The output driver impedance RON is defined by the value of the external reference resistor RZQ as follows:

• $R_{ON,x} = RZQ/y$ (with RZQ = 240Ω ±1%; $x$ = 34Ω or 40Ω with $y$ = 7 or 6, respectively)

The individual pull-up and pull-down resistors $R_{ON(PU)}$ and $R_{ON(PD)}$ are defined as follows:

• $R_{ON(PU)} = (V_{DDQ} - V_{OUT})/|I_{OUT}|$, when $R_{ON(PD)}$ is turned off

• $R_{ON(PD)} = (V_{OUT})/|I_{OUT}|$, when $R_{ON(PU)}$ is turned off

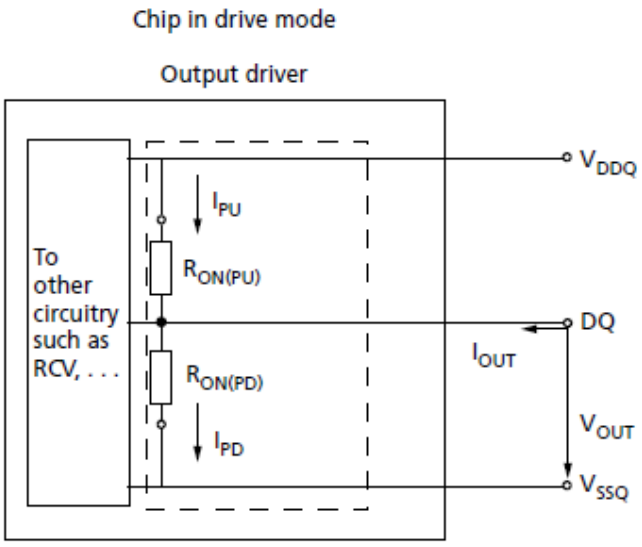


**Output Driver**

## 34 Ohm Output Driver Impedance

The 34Ω driver (MR1[5, 1] = 01) is the default driver. Unless otherwise stated, all timings and specifications listed herein apply to the 34Ω driver only. Its impedance $R_{ON}$ is defined by the value of the external reference resistor RZQ as follows: $R_{ON34}$ = RZQ/7 (with nominal RZQ = 240Ω ±1%) and is actually 34.3Ω ±1%.

### DDR3L 34 Ohm Driver Impedance Characteristics

| MR1 [5, 1] | $R_{ON}$ | Resistor | $V_{OUT}$ | Min | Nom | Max | Units |
|---|---|---|---|---|---|---|---|
| 0, 1 | 34.3Ω | $R_{ON,34PD}$ | 0.2 × $V_{DDQ}$ | 0.6 | 1.0 | 1.15 | RZQ/7 |
| | | | 0.5 × $V_{DDQ}$ | 0.9 | 1.0 | 1.15 | RZQ/7 |
| | | | 0.8 × $V_{DDQ}$ | 0.9 | 1.0 | 1.45 | RZQ/7 |
| | | $R_{ON,34PU}$ | 0.2 × $V_{DDQ}$ | 0.9 | 1.0 | 1.45 | RZQ/7 |
| | | | 0.5 × $V_{DDQ}$ | 0.9 | 1.0 | 1.15 | RZQ/7 |
| | | | 0.8 × $V_{DDQ}$ | 0.6 | 1.0 | 1.15 | RZQ/7 |
| Pull-up/pull-down mismatch ($MM_{PUPD}$) | | | $V_{IL(AC)}$ to $V_{IH(AC)}$ | –10 | N/A | 10 | % |

**Note:**

1. Tolerance limits assume RZQ of 240Ω ±1% and are applicable after proper ZQ calibration has been performed at a stable temperature and voltage: $V_{DDQ} = V_{DD}$; $V_{SSQ} = V_{SS}$).
   Refer to DDR3L 34 Ohm Output Driver Sensitivity if either the temperature or the voltage changes after calibration.
2. Measurement definition for mismatch between pull-up and pull-down ($MM_{PUPD}$). Measure both $R_{ON(PU)}$ and $R_{ON(PD)}$ at 0.5 × $V_{DDQ}$:

$$MM_{PUPD} = \frac{R_{ON(PU)} - R_{ON(PD)}}{R_{ON,nom}} \times 100$$

## DDR3L 34 Ohm Driver

Using Driver Pull-Up and Pull-Down Impedance Calculations table, the 34Ω driver's current range has been calculated and summarized in Driver $I_{OH}/I_{OL}$ Characteristics table for $V_{DD}$ = 1.35V, Driver $I_{OH}/I_{OL}$ Characteristics table for $V_{DD}$ = 1.45V, and Driver $I_{OH}/I_{OL}$ Characteristics table for $V_{DD}$ = 1.283V. The individual pull-up and pull-down resistors $R_{ON34(PD)}$ and $R_{ON34(PU)}$ are defined as follows:

- $R_{ON34(PD)} = (V_{OUT})/|I_{OUT}|$; $R_{ON34(PU)}$ is turned off
- $R_{ON34(PU)} = (V_{DDQ} - V_{OUT})/|I_{OUT}|$; $R_{ON34(PD)}$ is turned off

### DDR3L 34 Ohm Driver Pull-Up and Pull-Down Impedance Calculations

| $R_{ON}$ | | | | Min | Nom | Max | Unit |
|---|---|---|---|---|---|---|---|
| RZQ = 240Ω ± 1% | | | | 237.6 | 240 | 242.4 | Ω |
| RZQ/7 = (240Ω± 1%)/7 | | | | 33.9 | 34.3 | 34.6 | Ω |
| **MR1[5,1]** | **$R_{ON}$** | **Resistor** | **$V_{OUT}$** | **Min** | **Nom** | **Max** | **Unit** |
| 0, 1 | 34.3Ω | $R_{ON34(PD)}$ | 0.2 × $V_{DDQ}$ | 20.4 | 34.3 | 38.1 | Ω |
| | | | 0.5 × $V_{DDQ}$ | 30.5 | 34.3 | 38.1 | Ω |
| | | | 0.8 × $V_{DDQ}$ | 30.5 | 34.3 | 48.5 | Ω |
| | | $R_{ON34(PU)}$ | 0.2 × $V_{DDQ}$ | 30.5 | 34.3 | 48.5 | Ω |
| | | | 0.5 × $V_{DDQ}$ | 30.5 | 34.3 | 38.1 | Ω |
| | | | 0.8 × $V_{DDQ}$ | 20.4 | 34.3 | 38.1 | Ω |

### DDR3L 34 Ohm Driver $I_{OH}/I_{OL}$ Characteristics: $V_{DD} = V_{DDQ}$ = DDR3L@1.35V

| MR1[5,1] | $R_{ON}$ | Resistor | $V_{OUT}$ | Max | Nom | Min | Unit |
|---|---|---|---|---|---|---|---|
| 0, 1 | 34.3Ω | $R_{ON34(PD)}$ | $I_{OL}$ @ 0.2 × $V_{DDQ}$ | 13.3 | 7.9 | 7.1 | mA |
| | | | $I_{OL}$ @ 0.5 × $V_{DDQ}$ | 22.1 | 19.7 | 17.7 | mA |
| | | | $I_{OL}$ @ 0.8 × $V_{DDQ}$ | 35.4 | 31.5 | 22.3 | mA |
| | | $R_{ON34(PU)}$ | $I_{OH}$ @ 0.2 × $V_{DDQ}$ | 35.4 | 31.5 | 22.3 | mA |
| | | | $I_{OH}$ @ 0.5 × $V_{DDQ}$ | 22.1 | 19.7 | 17.7 | mA |
| | | | $I_{OH}$ @ 0.8 × $V_{DDQ}$ | 13.3 | 7.9 | 7.1 | mA |

### DDR3L 34 Ohm Driver $I_{OH}/I_{OL}$ Characteristics: $V_{DD} = V_{DDQ}$ = DDR3L@1.45V

| MR1[5,1] | $R_{ON}$ | Resistor | $V_{OUT}$ | Max | Nom | Min | Unit |
|---|---|---|---|---|---|---|---|
| 0, 1 | 34.3Ω | $R_{ON34(PD)}$ | $I_{OL}$ @ 0.2 × $V_{DDQ}$ | 14.2 | 8.5 | 7.6 | mA |
| | | | $I_{OL}$ @ 0.5 × $V_{DDQ}$ | 23.7 | 21.1 | 19.0 | mA |
| | | | $I_{OL}$ @ 0.8 × $V_{DDQ}$ | 38.0 | 33.8 | 23.9 | mA |
| | | $R_{ON34(PU)}$ | $I_{OH}$ @ 0.2 × $V_{DDQ}$ | 38.0 | 33.8 | 23.9 | mA |
| | | | $I_{OH}$ @ 0.5 × $V_{DDQ}$ | 23.7 | 21.1 | 19.0 | mA |
| | | | $I_{OH}$ @ 0.8 × $V_{DDQ}$ | 14.2 | 8.5 | 7.6 | mA |

**DDR3L 34 Ohm Driver $I_{OH}/I_{OL}$ Characteristics: $V_{DD} = V_{DDQ}$ = DDR3L@1.283**

| MR1[5,1] | RON | Resistor | VOUT | Max | Nom | Min | Unit |
|---|---|---|---|---|---|---|---|
| 0, 1 | 34.3Ω | $R_{ON34(PD)}$ | $I_{OL}$ @ 0.2 × $V_{DDQ}$ | 12.6 | 7.5 | 6.7 | mA |
| | | | $I_{OL}$ @ 0.5 × $V_{DDQ}$ | 21.0 | 18.7 | 16.8 | mA |
| | | | $I_{OL}$ @ 0.8 × $V_{DDQ}$ | 33.6 | 29.9 | 21.2 | mA |
| | | $R_{ON34(PU)}$ | $I_{OH}$ @ 0.2 × $V_{DDQ}$ | 33.6 | 29.9 | 21.2 | mA |
| | | | $I_{OH}$ @ 0.5 × $V_{DDQ}$ | 21.0 | 18.7 | 16.8 | mA |
| | | | $I_{OH}$ @ 0.8 × $V_{DDQ}$ | 12.6 | 7.5 | 6.7 | mA |

## DDR3L 34 Ohm Output Driver Sensitivity

If either the temperature or the voltage changes after ZQ calibration, then the tolerance limits listed in Driver Impedance Characteristics table can be expected to widen according to Output Driver Sensitivity Definition table and Output Driver Voltage and Temperature Sensitivity table.

**DDR3L 34 Ohm Output Driver Sensitivity Definition**

| Symbol | Min | Max | Unit |
|---|---|---|---|
| $R_{ON(PD)}$ @ 0.2 × $V_{DDQ}$ | 0.6 - $dR_{ON}dTL$ × \|ΔT\| - $dR_{ON}dVL$ × \|ΔV\| | 1.1 + $dR_{ON}dTL$ × \|ΔT\| + $dR_{ON}dVL$ × \|ΔV\| | RZQ/6 |
| $R_{ON(PD)}$ @ 0.5 × $V_{DDQ}$ | 0.9 - $dR_{ON}dTM$ × \|ΔT\| - $dR_{ON}dVM$ × \|ΔV\| | 1.1 + $dR_{ON}dTM$ × \|ΔT\| + $dR_{ON}dVM$ × \|ΔV\| | RZQ/6 |
| $R_{ON(PD)}$ @ 0.8 × $V_{DDQ}$ | 0.9 - $dR_{ON}dTH$ × \|ΔT\| - $dR_{ON}dVH$ × \|ΔV\| | 1.4 + $dR_{ON}dTH$ × \|ΔT\| + $dR_{ON}dVH$ × \|ΔV\| | RZQ/6 |
| $R_{ON(PU)}$ @ 0.2 × $V_{DDQ}$ | 0.9 - $dR_{ON}dTL$ × \|ΔT\| - $dR_{ON}dVL$ × \|ΔV\| | 1.4 + $dR_{ON}dTL$ × \|ΔT\| + $dR_{ON}dVL$ × \|ΔV\| | RZQ/6 |
| $R_{ON(PU)}$ @ 0.5 × $V_{DDQ}$ | 0.9 - $dR_{ON}dTM$ × \|ΔT\| - $dR_{ON}dVM$ × \|ΔV\| | 1.1 + $dR_{ON}dTM$ × \|ΔT\| + $dR_{ON}dVM$ × \|ΔV\| | RZQ/6 |
| $R_{ON(PU)}$ @ 0.8 × $V_{DDQ}$ | 0.6 - $dR_{ON}dTH$ × \|ΔT\| - $dR_{ON}dVH$ × \|ΔV\| | 1.1 + $dR_{ON}dTH$ × \|ΔT\| + $dR_{ON}dVH$ × \|ΔV\| | RZQ/6 |

**Note:** 1. $\Delta T = T - T_{(@CALIBRATION)}$; $\Delta V = V_{DDQ} - V_{DDQ(@CALIBRATION)}$; and $V_{DD} = V_{DDQ}$.

**34 Ohm Output Driver Voltage and Temperature Sensitivity**

| Change | Min | Max | Unit |
|---|---|---|---|
| $dR_{ON}dTM$ | 0 | 1.5 | %/°C |
| $dR_{ON}dVM$ | 0 | 0.13 | %/mV |
| $dR_{ON}dTL$ | 0 | 1.5 | %/°C |
| $dR_{ON}dVL$ | 0 | 0.13 | %/mV |
| $dR_{ON}dTH$ | 0 | 1.5 | %/°C |
| $dR_{ON}dVH$ | 0 | 0.13 | %/mV |

## DDR3L Alternative 40 Ohm Driver

### DDR3L 40 Ohm Driver Impedance Characteristics

| MR1[5,1] | $R_{ON}$ | Resistor | $V_{OUT}$ | Max | Nom | Min | Unit |
|---|---|---|---|---|---|---|---|
| 0, 0 | 40Ω | $R_{ON40(PD)}$ | 0.2 × $V_{DDQ}$ | 0.6 | 1.0 | 1.15 | mA |
| | | | 0.5 × $V_{DDQ}$ | 0.9 | 1.0 | 1.15 | mA |
| | | | 0.8 × $V_{DDQ}$ | 0.9 | 1.0 | 1.45 | mA |
| | | $R_{ON40(PU)}$ | 0.2 × $V_{DDQ}$ | 0.9 | 1.0 | 1.45 | mA |
| | | | 0.5 × $V_{DDQ}$ | 0.9 | 1.0 | 1.15 | mA |
| | | | 0.8 × $V_{DDQ}$ | 0.6 | 1.0 | 1.15 | mA |
| Pull-up/pull-down mismatch ($MM_{PUPD}$) | | | $V_{IL(AC)}$ to $V_{IH(AC)}$ | –10 | N/A | 10 | % |

**Note:**

1. Tolerance limits assume RZQ of 240Ω ±1% and are applicable after proper ZQ calibration has been performed at a stable temperature and voltage: $V_{DDQ} = V_{DD}$; $V_{SSQ} = V_{SS}$).
   Refer to DDR3L 40 Ohm Output Driver Sensitivity if either the temperature or the voltage changes after calibration.
2. Measurement definition for mismatch between pull-up and pull-down ($MM_{PUPD}$). Measure both $R_{ON(PU)}$ and $R_{ON(PD)}$ at 0.5 × $V_{DDQ}$:

$$MM_{PUPD} = \frac{R_{ON(PU)} - R_{ON(PD)}}{R_{ON,nom}} \times 100$$

## DDR3L 40 Ohm Output Driver Sensitivity

If either the temperature or the voltage changes after I/O calibration, then the tolerance limits listed in 40 Ohm Driver Impedance Characteristics table can be expected to widen according to 40 Ohm Output Driver Sensitivity Definition table and 40 Ohm Output Driver Voltage and Temperature Sensitivity table.

### DDR3L 40 Ohm Output Driver Sensitivity Definition

| Symbol | Min | Max | Unit |
|---|---|---|---|
| $R_{ON(PD)}$ @ 0.2 × $V_{DDQ}$ | 0.6 - $dR_{ON}dTL$ × \|ΔT\| - $dR_{ON}dVL$ × \|ΔV\| | 1.1 + $dR_{ON}dTL$ × \|ΔT\| + $dR_{ON}dVL$ × \|ΔV\| | RZQ/6 |
| $R_{ON(PD)}$ @ 0.5 × $V_{DDQ}$ | 0.9 - $dR_{ON}dTM$ × \|ΔT\| - $dR_{ON}dVM$ × \|ΔV\| | 1.1 + $dR_{ON}dTM$ × \|ΔT\| + $dR_{ON}dVM$ × \|ΔV\| | RZQ/6 |
| $R_{ON(PD)}$ @ 0.8 × $V_{DDQ}$ | 0.9 - $dR_{ON}dTH$ × \|ΔT\| - $dR_{ON}dVH$ × \|ΔV\| | 1.4 + $dR_{ON}dTH$ × \|ΔT\| + $dR_{ON}dVH$ × \|ΔV\| | RZQ/6 |
| $R_{ON(PU)}$ @ 0.2 × $V_{DDQ}$ | 0.9 - $dR_{ON}dTL$ × \|ΔT\| - $dR_{ON}dVL$ × \|ΔV\| | 1.4 + $dR_{ON}dTL$ × \|ΔT\| + $dR_{ON}dVL$ × \|ΔV\| | RZQ/6 |
| $R_{ON(PU)}$ @ 0.5 × $V_{DDQ}$ | 0.9 - $dR_{ON}dTM$ × \|ΔT\| - $dR_{ON}dVM$ × \|ΔV\| | 1.1 + $dR_{ON}dTM$ × \|ΔT\| + $dR_{ON}dVM$ × \|ΔV\| | RZQ/6 |
| $R_{ON(PU)}$ @ 0.8 × $V_{DDQ}$ | 0.6 - $dR_{ON}dTH$ × \|ΔT\| - $dR_{ON}dVH$ × \|ΔV\| | 1.1 + $dR_{ON}dTH$ × \|ΔT\| + $dR_{ON}dVH$ × \|ΔV\| | RZQ/6 |

**Note:** 1. $\Delta T = T - T_{(@CALIBRATION)}$; $\Delta V = V_{DDQ} - V_{DDQ(@CALIBRATION)}$; and $V_{DD} = V_{DDQ}$.

### 40 Ohm Output Driver Voltage and Temperature Sensitivity

| Change | Min | Max | Unit |
|---|---|---|---|
| $dR_{ON}dTM$ | 0 | 1.5 | %/°C |
| $dR_{ON}dVM$ | 0 | 0.15 | %/mV |
| $dR_{ON}dTL$ | 0 | 1.5 | %/°C |
| $dR_{ON}dVL$ | 0 | 0.15 | %/mV |
| $dR_{ON}dTH$ | 0 | 1.5 | %/°C |
| $dR_{ON}dVH$ | 0 | 0.15 | %/mV |

## Output Characteristics and Operating Conditions

### DDR3L Single-Ended Output Driver Characteristics

All voltages are referenced to $V_{SS}$

| Parameter/Condition | Symbol | Min | Max | Unit | Notes |
|---|---|---|---|---|---|
| Output leakage current: DQ are disabled; 0V ≤ $V_{OUT}$ ≤ $V_{DDQ}$; ODT is disabled; ODT is HIGH | $I_{OZ}$ | –5 | 5 | µA | 1 |
| Output slew rate: Single-ended; For rising and falling edges, measure between $V_{OL(AC)}$ = $V_{REF}$ - 0.09 × $V_{DDQ}$ and $V_{OH(AC)}$ = $V_{REF}$ + 0.09 × $V_{DDQ}$ | $SRQ_{se}$ | 1.75 | 6 | V/ns | 1, 2, 3, 4 |
| Single-ended DC high-level output voltage | $V_{OH(DC)}$ | 0.8 × $V_{DDQ}$ | | V | 1, 2, 5 |
| Single-ended DC mid-point level output voltage | $V_{OM(DC)}$ | 0.5 × $V_{DDQ}$ | | V | 1, 2, 5 |
| Single-ended DC low-level output voltage | $V_{OL(DC)}$ | 0.2 × $V_{DDQ}$ | | V | 1, 2, 5 |
| Single-ended AC high-level output voltage | $V_{OH(AC)}$ | $V_{TT}$ + 0.1 × $V_{DDQ}$ | | V | 1, 2, 3, 6 |
| Single-ended AC low-level output voltage | $V_{OL(AC)}$ | $V_{TT}$ - 0.1 × $V_{DDQ}$ | | V | 1, 2, 3, 6 |
| Delta $R_{ON}$ between pull-up and pull-down for DQ/DQS | $MM_{PUPD}$ | –10 | 10 | % | 1, 7 |
| Test load for AC timing and output slew rates | Output to $V_{TT}$ ($V_{DDQ}$/2) via 25Ω resistor | | | | 3 |

**Note:**

1. RZQ of 240Ω ±1% with RZQ/7 enabled (default 34Ω driver) and is applicable after proper ZQ calibration has been performed at a stable temperature and voltage ($V_{DDQ}$ = $V_{DD}$; $V_{SSQ}$ = $V_{SS}$).
2. $V_{TT}$ = $V_{DDQ}$/2.
3. See Reference Output Load for AC Timing and Output Slew Rate figure for the test load configuration.
4. The 6 V/ns maximum is applicable for a single DQ signal when it is switching either from HIGH to LOW or LOW to HIGH while the remaining DQ signals in the same byte lane are either all static or all switching in the opposite direction. For all other DQ signal switching combinations, the maximum limit of 6 V/ns is reduced to 5 V/ns.
5. See Output Driver figure for IV curve linearity. Do not use AC test load.
6. See Single-Ended Output Slew Rate Definition table for output slew rate.
7. See Output Driver figure for additional information.
8. See DQ Output Signal figure for an example of a single-ended output signal.

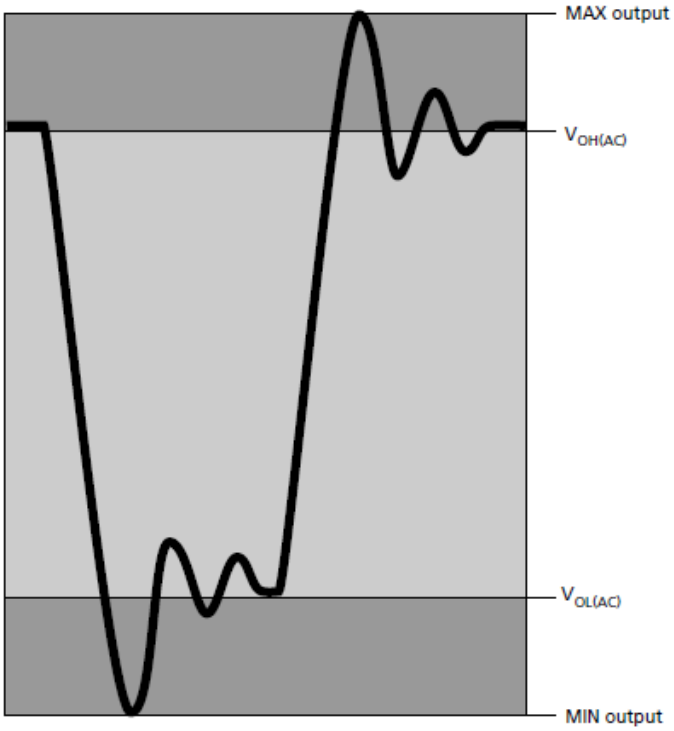


**DQ Output Signal**

**DDR3L Differential Output Driver Characteristics**

| Parameter/Condition | Symbol | Min | Max | Unit | Notes |
|---|---|---|---|---|---|
| Output leakage current: DQ are disabled; 0V ≤ $V_{OUT}$ ≤ $V_{DDQ}$; ODT is disabled; ODT is HIGH | $I_{OZ}$ | –5 | 5 | µA | 1 |
| DDR3L Output slew rate: Differential; For rising and falling edges, measure between $V_{OL,diff(AC)}$ = –0.18 × $V_{DDQ}$ and $V_{OH,diff(AC)}$ = 0.18 × $V_{DDQ}$ | $SRQ_{diff}$ | 3.5 | 12 | V/ns | 1 |
| Differential high-level output voltage | $V_{OH,diff(AC)}$ | +0.2 × $V_{DDQ}$ | | V | 1, 4 |
| Differential low-level output voltage | $V_{OL,diff(AC)}$ | –0.2 × $V_{DDQ}$ | | V | 1, 4 |
| Delta Ron between pull-up and pull-down for DQ/DQS | $MM_{PUPD}$ | –10 | 10 | % | 1, 5 |
| Test load for AC timing and output slew rates | Output to $V_{TT}$ ($V_{DDQ}$/2) via 25Ω resistor | | | | 3 |

**Note:**

1. $R_{ZQ}$ of 240Ω ±1% with $R_{ZQ}$/7 enabled (default 34Ω driver) and is applicable after proper ZQ calibration has been performed at a stable temperature and voltage ($V_{DDQ}$ = $V_{DD}$; $V_{SSQ}$ = $V_{SS}$).
2. $V_{REF}$ = $V_{DDQ}$/2; slew rate @ 5 V/ns, interpolate for faster slew rate.
3. See Reference Output Load for AC Timing and Output Slew Rate figure for the test load configuration.
4. See Differential Output Slew Rate Definition table for the output slew rate.
5. See 34 Ohm Driver Impedance Characteristics table for additional information.
6. See Differential Output Signal figure for an example of a differential output signal.

## DDR3L Differential Output Driver Characteristics $V_{OX(AC)}$

All voltages are referenced to $V_{SS}$

| Parameter/Condi- tion | Symbol | | DDR3L-1866/2133 DQS/DQS# Differential Slew Rate | | | | | | | | | Unit |
|---|---|---|---|---|---|---|---|---|---|---|---|---|
| | | | 3.5V/n s | 4V/ns | 5v/ns | 6V/ns | 7V/ns | 8V/ns | 9V/ns | 10V/ns | 12V/ns | |
| Output differential crosspoint voltage | $V_{OX(AC)}$ | Max | +90 | +105 | +135 | +155 | +180 | +205 | +205 | +205 | +205 | mV |
| | | Min | -90 | -105 | -135 | -155 | -180 | -205 | -205 | -205 | -205 | mV |

**Note:**

1. RZQ of 240Ω ±1% with RZQ/7 enabled (default 34Ω driver) and is applicable after proper ZQ calibration has been performed at a stable temperature and voltage ($V_{DDQ} = V_{DD}$; $V_{SSQ} = V_{SS}$).
2. See Reference Output Load for AC Timing and Output Slew Rate figure for the test load configuration.
3. See Differential Output Signal figure for an example of a differential output signal.
4. For a differential slew rate between the list values, the $V_{OX(AC)}$ value may be obtained by linear interpolation.

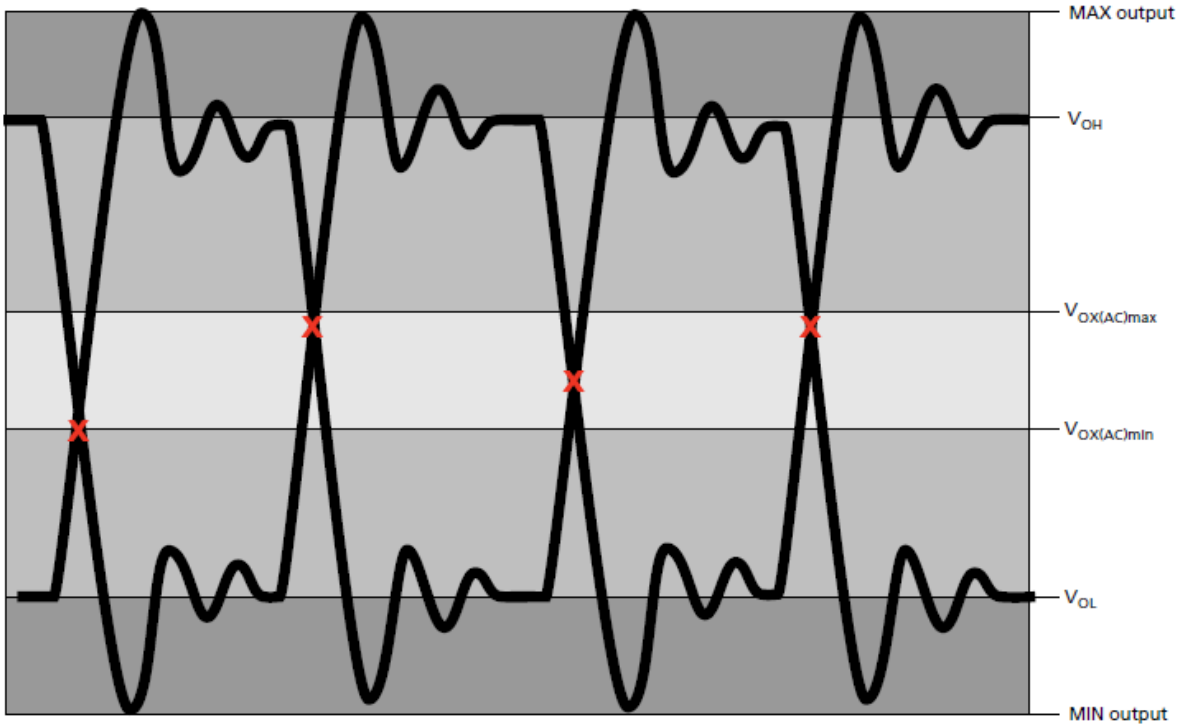


**Differential Output Signal**

## Reference Output Load

Reference Output Load for AC Timing and Output Slew Rate figure represents the effective reference load of 25Ω used in defining the relevant device AC timing parameters (except ODT reference timing) as well as the output slew rate measurements. It is not intended to be a precise representation of a particular system environment or a depiction of the actual load presented by a production tester. System designers should use IBIS or other simulation tools to correlate the timing reference load to a system environment.

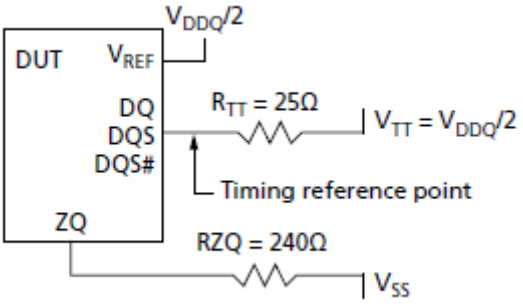


**Reference Output Load for AC Timing and Output Slew Rate**

## Slew Rate Definitions for Single-Ended Output Signals

The single-ended output driver is summarized in Single-Ended Output Driver Characteristics table. With the reference load for timing measurements, the output slew rate for falling and rising edges is defined and measured between $V_{OL(AC)}$ and $V_{OH(AC)}$ for single-ended signals.

### Single-Ended Output Slew Rate Definition

| Single-Ended Output Slew Rates (Linear Signals) | | Measured | | Calculation |
|---|---|---|---|---|
| Output | Edge | From | To | |
| DQ | Rising | $V_{OL(AC)}$ | $V_{OH(AC)}$ | $\frac{V_{OH(AC)} - V_{OL(AC)}}{\Delta TR_{se}}$ |
| | Falling | $V_{OH(AC)}$ | $V_{OL(AC)}$ | $\frac{V_{OH(AC)} - V_{OL(AC)}}{\Delta TF_{se}}$ |

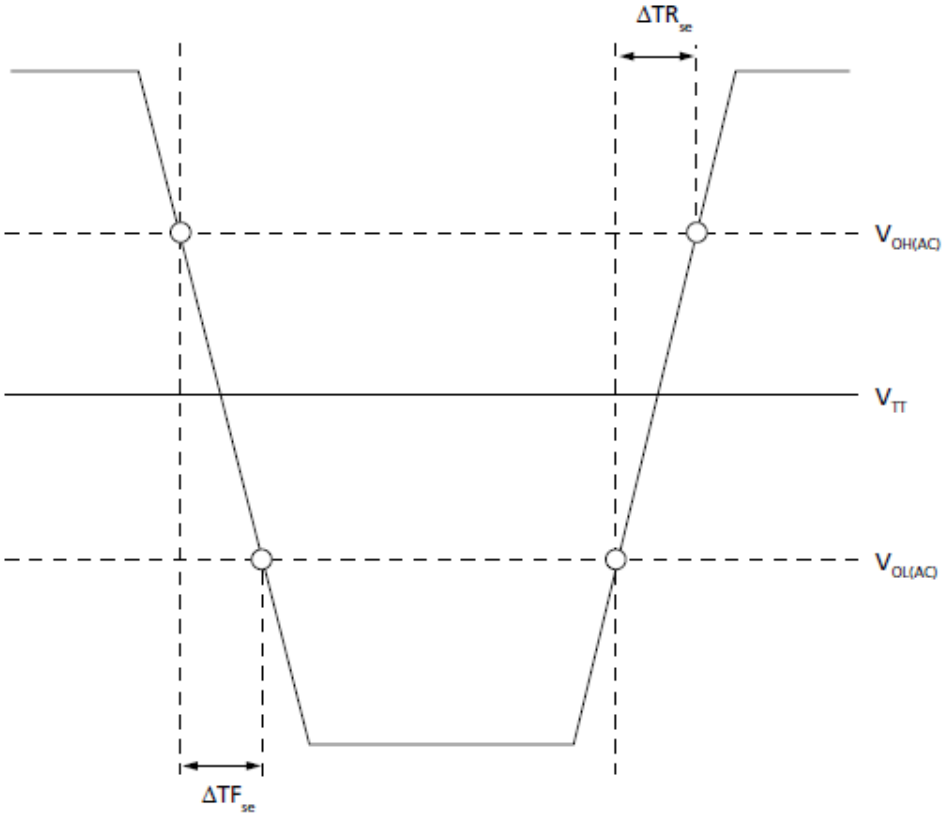


**Nominal Slew Rate Definition for Single-Ended Output Signals**

## Slew Rate Definitions for Differential Output Signals

The differential output driver is summarized in Differential Output Driver Characteristics table. With the reference load for timing measurements, the output slew rate for falling and rising edges is defined and measured between $V_{OL(AC)}$ and $V_{OH(AC)}$ for differential signals.

**Differential Output Slew Rate Definition**

| Differential Output Slew Rates (Linear Signals) | | Measured | | Calculation |
|---|---|---|---|---|
| Output | Edge | From | To | |
| DQS, DQS# | Rising | $V_{OL,diff(AC)}$ | $V_{OH,diff(AC)}$ | $\frac{V_{OH,diff(AC)} - V_{OL,diff(AC)}}{\Delta TR_{diff}}$ |
| | Falling | $V_{OH,diff(AC)}$ | $V_{OL,diff(AC)}$ | $\frac{V_{OH,diff(AC)} - V_{OL,diff(AC)}}{\Delta TF_{diff}}$ |

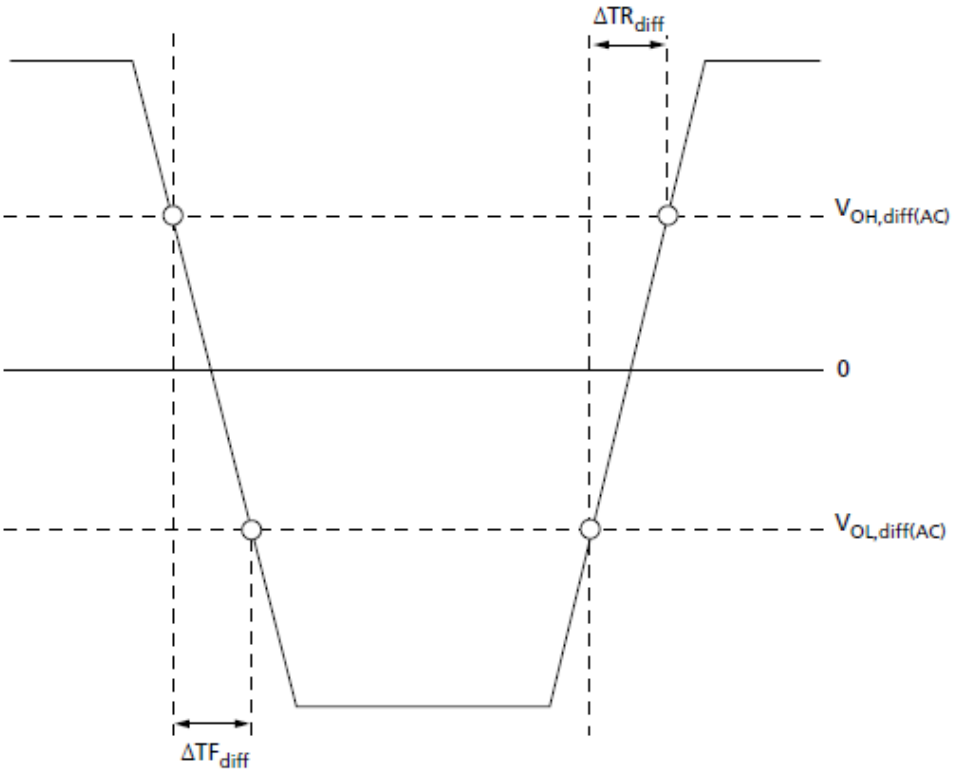


**Nominal Differential Output Slew Rate Definition for DQS, DQS#**

## Speed Bin Tables

### DDR3L-1866 Speed Bins

| DDR3L-1866 Speed Bin | | | | | Unit | Notes |
|---|---|---|---|---|---|---|
| CL-$^{t}$RCD-$^{t}$RP | | | 13-13-13 | | | |
| Parameter | | Symbol | Min | Max | | |
| Internal READ command to first data | | $^{t}$AA | 13.91 | 20 | | |
| ACTIVATE to internal READ or WRITE delay time | | $^{t}$RCD | 13.91 | – | ns | |
| PRECHARGE command period | | $^{t}$RP | 13.91 | – | ns | |
| ACTIVATE-to-ACTIVATE or REFRESH command period | | $^{t}$RC | 47.91 | – | ns | |
| ACTIVATE-to-PRECHARGE command period | | $^{t}$RAS | 34 | 9 x $^{t}$REFI | ns | 2 |
| CL = 5 | CWL = 5 | $^{t}$CK (AVG) | 3.0 | 3.3 | ns | 3 |
| | CWL = 6, 7, 8, 9 | $^{t}$CK (AVG) | Reserved | | ns | 4 |
| CL = 6 | CWL = 5 | $^{t}$CK (AVG) | 2.5 | 3.3 | ns | 3 |
| | CWL = 6, 7, 8, 9 | $^{t}$CK (AVG) | Reserved | | ns | 4 |
| CL = 7 | CWL = 5, 7, 8, 9 | $^{t}$CK (AVG) | Reserved | | ns | 4 |
| | CWL = 6 | $^{t}$CK (AVG) | 1.875 | <2.5 | ns | 3 |
| CL = 8 | CWL = 5, 8, 9 | $^{t}$CK (AVG) | Reserved | | ns | 4 |
| | CWL = 6 | $^{t}$CK (AVG) | 1.875 | <2.5 | ns | 3 |
| | CWL = 7 | $^{t}$CK (AVG) | Reserved | | ns | 4 |
| CL = 9 | CWL = 5, 6, 8, 9 | $^{t}$CK (AVG) | Reserved | | ns | 4 |
| | CWL = 7 | $^{t}$CK (AVG) | 1.5 | <1.875 | ns | 3 |
| CL = 10 | CWL = 5, 6, 9 | $^{t}$CK (AVG) | Reserved | | ns | 4 |
| | CWL = 7 | $^{t}$CK (AVG) | 1.5 | <1.875 | ns | 3 |
| | CWL = 8 | $^{t}$CK (AVG) | Reserved | | ns | 4 |
| CL = 11 | CWL = 5, 6, 7 | $^{t}$CK (AVG) | Reserved | | ns | 4 |
| | CWL = 8 | $^{t}$CK (AVG) | 1.25 | <1.5 | ns | 3 |
| | CWL = 9 | $^{t}$CK (AVG) | Reserved | | ns | 4 |
| CL = 12 | CWL = 5, 6, 7, 8 | $^{t}$CK (AVG) | Reserved | | ns | 4 |
| | CWL = 9 | $^{t}$CK (AVG) | Reserved | | ns | 4 |
| CL = 13 | CWL = 5, 6, 7, 8 | $^{t}$CK (AVG) | Reserved | | ns | 4 |
| | CWL = 9 | $^{t}$CK (AVG) | 1.07 | <1.25 | ns | 3 |
| Supported CL settings | | | 5, 6, 7, 8, 9, 10, 11, 13 | | CK | |
| Supported CWL settings | | | 5, 6, 7, 8, 9 | | CK | |

**Note:**

1. $^{t}$REFI depends on $T_{OPER}$.
2. The CL and CWL settings result in $^{t}$CK requirements. When making a selection of $^{t}$CK, both CL and CWL requirement settings need to be fulfilled.
3. Reserved settings are not allowed.

**DDR3L-2133 Speed Bins**

| DDR3L-2133 Speed Bin | | | | | Unit | Notes |
|---|---|---|---|---|---|---|
| CL-$^{t}$RCD-$^{t}$RP | | | 14-14-14 | | | |
| Parameter | | Symbol | Min | Max | | |
| Internal READ command to first data | | $^{t}$AA | 13.09 | 20 | | |
| ACTIVATE to internal READ or WRITE delay time | | $^{t}$RCD | 13.09 | – | ns | |
| PRECHARGE command period | | $^{t}$RP | 13.09 | – | ns | |
| ACTIVATE-to-ACTIVATE or REFRESH command period | | $^{t}$RC | 46.09 | – | ns | |
| ACTIVATE-to-PRECHARGE command period | | $^{t}$RAS | 33 | 9 x $^{t}$REFI | ns | 2 |
| CL = 5 | CWL = 5 | $^{t}$CK (AVG) | 3.0 | 3.3 | ns | 3 |
| | CWL = 6, 7, 8, 9 | $^{t}$CK (AVG) | Reserved | | ns | 4 |
| CL = 6 | CWL = 5 | $^{t}$CK (AVG) | 2.5 | 3.3 | ns | 3 |
| | CWL = 6, 7, 8, 9 | $^{t}$CK (AVG) | Reserved | | ns | 4 |
| CL = 7 | CWL = 5, 7, 8, 9 | $^{t}$CK (AVG) | Reserved | | ns | 4 |
| | CWL = 6 | $^{t}$CK (AVG) | 1.875 | <2.5 | ns | 3 |
| CL = 8 | CWL = 5, 8, 9 | $^{t}$CK (AVG) | Reserved | | ns | 4 |
| | CWL = 6 | $^{t}$CK (AVG) | 1.875 | <2.5 | ns | 3 |
| | CWL = 7 | $^{t}$CK (AVG) | Reserved | | ns | 4 |
| CL = 9 | CWL = 5, 6, 8, 9 | $^{t}$CK (AVG) | Reserved | | ns | 4 |
| | CWL = 7 | $^{t}$CK (AVG) | 1.5 | <1.875 | ns | 3 |
| CL = 10 | CWL = 5, 6, 9 | $^{t}$CK (AVG) | Reserved | | ns | 4 |
| | CWL = 7 | $^{t}$CK (AVG) | 1.5 | <1.875 | ns | 3 |
| | CWL = 8 | $^{t}$CK (AVG) | Reserved | | ns | 4 |
| CL = 11 | CWL = 5, 6, 7 | $^{t}$CK (AVG) | Reserved | | ns | 4 |
| | CWL = 8 | $^{t}$CK (AVG) | 1.25 | <1.5 | ns | 3 |
| | CWL = 9 | $^{t}$CK (AVG) | Reserved | | ns | 4 |
| CL = 12 | CWL = 5, 6, 7, 8 | $^{t}$CK (AVG) | Reserved | | ns | 4 |
| | CWL = 9 | $^{t}$CK (AVG) | Reserved | | ns | 4 |
| CL = 13 | CWL = 5, 6, 7, 8 | $^{t}$CK (AVG) | Reserved | | ns | 4 |
| | CWL = 9 | $^{t}$CK (AVG) | 1.07 | <1.25 | ns | 3 |
| CL = 14 | CWL = 5, 6, 7, 8, 9 | $^{t}$CK (AVG) | Reserved | | ns | 4 |
| | CWL = 10 | $^{t}$CK (AVG) | 0.938 | <1.07 | ns | 3 |
| Supported CL settings | | | 5, 6, 7, 8, 9, 10, 11, 13, 14 | | CK | |
| Supported CWL settings | | | 5, 6, 7, 8, 9 | | CK | |

**Note:**

1. $^{t}$REFI depends on $T_{OPER}$.
2. The CL and CWL settings result in $^{t}$CK requirements. When making a selection of $^{t}$CK, both CL and CWL requirement settings need to be fulfilled.
3. Reserved settings are not allowed.

# Electrical Characteristics and AC Operating Conditions

### Electrical Characteristics and AC Operating Conditions

Notes 1–8 apply to the entire table

| Parameter | | Symbol | DDR3L-1866 | | DDR3L-2133 | | Unit | Notes |
|---|---|---|---|---|---|---|---|---|
| | | | Min | Max | Min | Max | | |
| **Clock Timing** | | | | | | | | |
| Clock period average: DLL disable mode | $T_C$ ≤ 85°C | $^tCK$ (DLL_DIS) | 8 | 7800 | 8 | 7800 | ns | 9, 42 |
| | $T_C$ >85°C to 95°C | | 8 | 3900 | 8 | 3900 | ns | 42 |
| Clock period average: DLL enable mode | | $^tCK$ (AVG) | See Speed Bin Tables for $^tCK$ range allowed | | | | ns | 10, 11 |
| High pulse width average | | $^tCH$ (AVG) | 0.47 | 0.53 | 0.47 | 0.53 | CK | 12 |
| Low pulse width average | | $^tCL$ (AVG) | 0.47 | 0.53 | 0.47 | 0.53 | CK | 12 |
| Clock period jitter | DLL locked | $^tJITper$ | –60 | 60 | -50 | 50 | ps | 13 |
| | DLL locking | $^tJITper,lck$ | –50 | 50 | -40 | 40 | ps | 13 |
| Clock absolute period | | $^tCK$ (ABS) | MIN = $^tCK$ (AVG) MIN + $^tJITper$ MIN; MAX = $^tCK$ (AVG) MAX + $^tJITper$ MAX | | | | ps | |
| Clock absolute high pulse width | | $^tCH$ (ABS) | 0.43 | – | 0.43 | – | $^tCK$ (AVG) | 14 |
| Clock absolute low pulse width | | $^tCL$ (ABS) | 0.43 | – | 0.43 | – | $^tCK$ (AVG) | 15 |
| Cycle-to-cycle jitter | DLL locked | $^tJITcc$ | 120 | | 120 | | ps | 16 |
| | DLL locking | $^tJITcc,lck$ | 100 | | 100 | | ps | 16 |
| Cumulative error across | 2 cycles | $^tERR2per$ | –88 | 88 | -74 | 74 | ps | 17 |
| | 3 cycles | $^tERR3per$ | –105 | 105 | -87 | 87 | ps | 17 |
| | 4 cycles | $^tERR4per$ | –117 | 117 | -97 | 97 | ps | 17 |
| | 5 cycles | $^tERR5per$ | –126 | 126 | -105 | 105 | ps | 17 |
| | 6 cycles | $^tERR6per$ | –133 | 133 | -111 | 111 | ps | 17 |
| | 7 cycles | $^tERR7per$ | –139 | 139 | -116 | 116 | ps | 17 |
| | 8 cycles | $^tERR8per$ | –145 | 145 | -121 | 121 | ps | 17 |
| | 9 cycles | $^tERR9per$ | –150 | 150 | -125 | 125 | ps | 17 |
| | 10 cycles | $^tERR10per$ | –154 | 154 | -128 | 128 | ps | 17 |
| | 11 cycles | $^tERR11per$ | –158 | 158 | -132 | 132 | ps | 17 |
| | 12 cycles | $^tERR12per$ | –161 | 161 | -134 | 134 | ps | 17 |
| | n = 13, 14 . . . 49, 50 cycles | $^tERRnper$ | $^tERRnper$ MIN = (1 + 0.68ln[n]) × $^tJITper$ MIN<br>$^tERRnper$ MAX = (1 + 0.68ln[n]) × $^tJITper$ MAX | | | | ps | 17 |

| Parameter | | Symbol | DDR3L-1866 | | DDR3L-2133 | | Unit | Notes |
|---|---|---|---|---|---|---|---|---|
| | | | Min | Max | Min | Max | | |
| **DQ Input Timing** | | | | | | | | |
| Data setup time to DQS, DQS# | Base (specification) | $t_{DS}$ (AC130 | 70 | – | 55 | - | ps | 18, 19, 44 |
| | $V_{REF}$ @ 1 V/ns | | 135 | – | 120.5 | - | ps | 19, 20 |
| Data hold time from DQS, DQS# | Base (specification) | $t_{DH}$ (DC90) | 75 | – | 60 | - | ps | 18, 19 |
| | $V_{REF}$ @ 1 V/ns | | 110 | – | 105 | - | ps | 19, 20 |
| Minimum data pulse width | | $t_{DIPW}$ | 320 | – | 280 | - | ps | 41 |
| **DQ Output Timing** | | | | | | | | |
| DQS, DQS# to DQ skew, per access | | $t_{DQSQ}$ | – | 85 | - | 75 | ps | |
| DQ output hold time from DQS, DQS# | | $t_{QH}$ | 0.38 | – | 0.38 | - | $t_{CK}$ (AVG) | 21 |
| DQ Low-Z time from CK, CK# | | $t_{LZDQ}$ | –390 | 195 | -360 | 180 | ps | 22, 23 |
| DQ High-Z time from CK, CK# | | $t_{HZDQ}$ | – | 195 | - | 180 | ps | 22, 23 |
| **DQ Strobe Input Timing** | | | | | | | | |
| DQS, DQS# rising to CK, CK# ris- ing | | $t_{DQSS}$ | –0.27 | 0.27 | –0.27 | 0.27 | CK | 25 |
| DQS, DQS# differential input low pulse width | | $t_{DQSL}$ | 0.45 | 0.55 | 0.45 | 0.55 | CK | |
| DQS, DQS# differential input high pulse width | | $t_{DQSH}$ | 0.45 | 0.55 | 0.45 | 0.55 | CK | |
| DQS, DQS# falling setup to CK, CK# rising | | $t_{DSS}$ | 0.18 | – | 0.18 | – | CK | 25 |
| DQS, DQS# falling hold from CK, CK# rising | | $t_{DSH}$ | 0.18 | – | 0.18 | – | CK | 25 |
| DQS, DQS# differential WRITE preamble | | $t_{WPRE}$ | 0.9 | – | 0.9 | – | CK | |
| DQS, DQS# differential WRITE postamble | | $t_{WPST}$ | 0.3 | – | 0.3 | – | CK | |
| **DQ Strobe Output Timing** | | | | | | | | |
| DQS, DQS# rising to/from rising CK, CK# | | $t_{DQSCK}$ | –195 | 195 | -180 | 180 | ps | 23 |
| DQS, DQS# rising to/from rising CK, CK# when DLL is disabled | | $t_{DQSCK}$ (DLL_DIS) | 1 | 10 | 1 | 10 | ns | 26 |

| Parameter | | Symbol | DDR3L-1866 | | DDR3L-2133 | | Unit | Notes |
|---|---|---|---|---|---|---|---|---|
| | | | Min | Max | Min | Max | | |
| DQS, DQS# differential output high time | | $^{t}$QSH | 0.40 | – | 0.40 | - | CK | 21 |
| DQS, DQS# differential output low time | | $^{t}$QSL | 0.40 | – | 0.40 | - | CK | 21 |
| DQS, DQS# Low-Z time (RL - 1) | | $^{t}$LZDQS | –390 | 195 | –360 | 180 | ps | 22, 23 |
| DQS, DQS# High-Z time (RL + BL/2) | | $^{t}$HZDQS | – | 195 | – | 180 | ps | 22, 23 |
| DQS, DQS# differential READ preamble | | $^{t}$RPRE | 0.9 | Note 24 | 0.9 | Note 24 | CK | 23, 24 |
| DQS, DQS# differential READ postamble | | $^{t}$RPST | 0.3 | Note 27 | 0.3 | Note 27 | CK | 23, 27 |
| **Command and Address Timing** | | | | | | | | |
| DLL locking time | | $^{t}$DLLK | 512 | – | 512 | - | CK | 28 |
| CTRL, CMD, ADDR setup to CK,CK# | Base (specification) | $^{t}$IS (AC135) | 65 | – | 60 | - | ps | 29, 30, 44 |
| | $V_{REF}$ @ 1 V/ns | | 200 | – | 195 | - | ps | 20, 30 |
| CTRL, CMD, ADDR setup to CK,CK# | Base (specification) | $^{t}$IS (AC125) | 150 | – | 135 | - | ps | 29, 30, 44 |
| | $V_{REF}$ @ 1 V/ns | | 275 | – | 260 | - | ps | 20, 30 |
| CTRL, CMD, ADDR hold from CK,CK# | Base (specification) | $^{t}$IH (DC90) | 110 | – | 105 | - | ps | 29, 30 |
| | $V_{REF}$ @ 1 V/ns | | 200 | – | 195 | - | ps | 20, 30 |
| Minimum CTRL, CMD, ADDR pulse width | | $^{t}$IPW | 535 | – | 470 | - | ps | 41 |
| ACTIVATE to internal READ or WRITE delay | | $^{t}$RCD | See Speed Bin Tables for $^{t}$RCD | | | | ns | 31 |
| PRECHARGE command period | | $^{t}$RP | See Speed Bin Tables for $^{t}$RP | | | | ns | 31 |
| ACTIVATE-to-PRECHARGE command period | | $^{t}$RAS | See Speed Bin Tables for $^{t}$RAS | | | | ns | 31, 32 |
| ACTIVATE-to-ACTIVATE command period | | $^{t}$RC | See Speed Bin Tables for $^{t}$RC | | | | ns | 31, 43 |
| ACTIVATE-to-ACTIVATE minimum command period | x16 (2KB page size) | $^{t}$RRD | MIN = greater of 4CK or 6ns | | | | CK | 31 |

| Parameter | | Symbol | DDR3L-1866 | | DDR3L-2133 | | Unit | Notes |
|---|---|---|---|---|---|---|---|---|
| | | | Min | Max | Min | Max | | |
| Four ACTIVATE windows | x16 (2KB page size) | $^{t}$FAW | 35 | - | 35 | – | ns | 31 |
| Write recovery time | | $^{t}$WR | MIN = 15ns; MAX = N/A | | | | ns | 31, 32, 33,34 |
| Delay from start of internal WRITE transaction to internal READ command | | $^{t}$WTR | MIN = greater of 4CK or 7.5ns; MAX = N/A | | | | CK | 31, 34 |
| READ-to-PRECHARGE time | | $^{t}$RTP | MIN = greater of 4CK or 7.5ns; MAX = N/A | | | | CK | 31, 32 |
| CAS#-to-CAS# command delay | | $^{t}$CCD | MIN = 4CK; MAX = N/A | | | | CK | |
| Auto precharge write recovery + precharge time | | $^{t}$DAL | MIN = WR + $^{t}$RP/$^{t}$CK (AVG); MAX = N/A | | | | CK | |
| MODE REGISTER SET command cycle time | | $^{t}$MRD | MIN = 4CK; MAX = N/A | | | | CK | |
| MODE REGISTER SET command update delay | | $^{t}$MOD | MIN = greater of 12CK or 15ns; MAX = N/A | | | | CK | |
| MULTIPURPOSE REGISTER READ burst end to mode register set for multipurpose register exit | | $^{t}$MPRR | MIN = 1CK; MAX = N/A | | | | CK | |
| **Calibration Timing** | | | | | | | | |
| ZQCL command: Long calibration time | POWER-UP and RESET operation | $^{t}$ZQinit | MIN = N/A<br>MAX = MAX(512nCK, 640ns) | | | | CK | |
| | Normal operation | $^{t}$ZQoper | MIN = N/A<br>MAX = MAX(256nCK, 320ns) | | | | CK | |
| ZQCS command: Short calibration time | | $^{t}$ZQCS | MIN = N/A<br>MAX = MAX(64nCK, 80ns) $^{t}$ZQCS | | | | CK | |
| **Initialization and Reset Timing** | | | | | | | | |
| Exit reset from CKE HIGH to a valid command | | $^{t}$XPR | MIN = greater of 5CK or $^{t}$RFC + 10ns; MAX = N/A | | | | CK | |
| Begin power supply ramp to power supplies stable | | $^{t}$VDDPR | MIN = N/A; MAX = 200 | | | | ms | |
| RESET# LOW to power supplies stable | | $^{t}$RPS | MIN = 0; MAX = 200 | | | | ms | |
| RESET# LOW to I/O and $R_{TT}$ High- Z | | $^{t}$IOZ | MIN = N/A; MAX = 20 | | | | ns | 35 |

| Parameter | | Symbol | DDR3L-1866 | | DDR3L-2133 | | Unit | Notes |
|---|---|---|---|---|---|---|---|---|
| | | | Min | Max | Min | Max | | |
| **Refresh Timing** | | | | | | | | |
| REFRESH-to-ACTIVATE or REFRESH command period | | $^{t}$RFC – 4Gb | MIN = 260; MAX = 70,200 | | | | ns | |
| Maximum refresh period | $T_C$ ≤ 85°C | – | 64 (1X) | | | | ms | 36 |
| | $T_C$ > 85°C and ≦ 95°C | – | 32 (2X) | | | | ms | 36 |
| Maximum average periodic refresh | $T_C$ ≤ 85°C | $^{t}$REFI | 7.8 (64ms/8192) | | | | µs | 36 |
| | $T_C$ > 85°C and ≦ 95°C | | 3.9 (32ms/8192) | | | | µs | 36 |
| **Self Refresh Timing** | | | | | | | | |
| Exit self refresh to commands not requiring a locked DLL | | $^{t}$XS | MIN = greater of 5CK or $^{t}$RFC + 10ns; MAX = N/A | | | | CK | |
| Exit self refresh to commands requiring a locked DLL | | $^{t}$XSDLL | MIN = $^{t}$DLLK (MIN); MAX = N/A | | | | CK | 28 |
| Minimum CKE low pulse width for self refresh entry to self re- fresh exit timing | | $^{t}$CKESR | MIN = $^{t}$CKE (MIN) + CK; MAX = N/A | | | | CK | |
| Valid clocks after self refresh en- try or power-down entry | | $^{t}$CKSRE | MIN = greater of 5CK or 10ns; MAX = N/A | | | | CK | |
| Valid clocks before self refresh exit, power-down exit, or reset exit | | $^{t}$CKSRX | MIN = greater of 5CK or 10ns; MAX = N/A | | | | CK | |
| **Power-Down Timing** | | | | | | | | |
| CKE MIN pulse width | | $^{t}$CKE (MIN) | Greater of 3CK or 5ns | | | | CK | |
| Command pass disable delay | | $^{t}$CPDED | MIN = 2; MAX = N/A | | | | CK | |
| Power-down entry to power- down exit timing | | $^{t}$PD | MIN = $^{t}$CKE (MIN); MAX = 9 × $^{t}$REFI | | | | CK | |
| Begin power-down period prior to CKE registered HIGH | | $^{t}$ANPD | WL - 1CK | | | | CK | |
| Power-down entry period: ODT either synchronous or asynchronous | | PDE | Greater of $^{t}$ANPD or $^{t}$RFC - REFRESH command to CKE LOW time | | | | CK | |

| Parameter | | Symbol | DDR3L-1866 | | DDR3L-2133 | | Unit | Notes |
|---|---|---|---|---|---|---|---|---|
| | | | Min | Max | Min | Max | | |
| Power-down exit period: ODT either synchronous or asynchronous | | PDX | $^{t}$ANPD + $^{t}$XPDLL | | | | CK | |
| **Power-Down Entry Minimum Timing** | | | | | | | | |
| ACTIVATE command to power-down entry | | $^{t}$ACTPDEN | MIN = 2 | | | | CK | |
| PRECHARGE/PRECHARGE ALL command to power-down entry | | $^{t}$PRPDEN | MIN = 2 | | | | CK | |
| REFRESH command to power-down entry | | $^{t}$REFPDEN | MIN = 2 | | | | CK | 37 |
| MRS command to power-down entry | | $^{t}$MRSPDEN | MIN = $^{t}$MOD (MIN) | | | | CK | |
| READ/READ with auto precharge command to power-down entry | | $^{t}$RDPDEN | MIN = RL + 4 + 1 | | | | CK | |
| WRITE command to power-down entry | BL8 (OTF, MRS) BC4OTF | $^{t}$WRPDEN | MIN = WL + 4 + $^{t}$WR/$^{t}$CK (AVG) | | | | CK | |
| | BC4MRS | $^{t}$WRPDEN | MIN = WL + 2 + $^{t}$WR/$^{t}$CK (AVG) | | | | CK | |
| WRITE with auto precharge command to power-down entry | BL8 (OTF, MRS) BC4OTF | $^{t}$WRAPDEN | MIN = WL + 4 + WR + 1 | | | | CK | |
| | BC4MRS | $^{t}$WRAPDEN | MIN = WL + 2 + WR + 1 | | | | CK | |
| **Power-Down Exit Timing** | | | | | | | | |
| DLL on, any valid command, or DLL off to commands not requiring locked DLL | | $^{t}$XP | MIN = greater of 3CK or 6ns; MAX = N/A | | | | CK | |
| Precharge power-down with DLL off to commands requiring a locked DLL | | $^{t}$XPDLL | MIN = greater of 10CK or 24ns; MAX = N/A | | | | CK | 28 |
| **ODT Timing** | | | | | | | | |
| $R_{TT}$ synchronous turn-on delay | | ODTLon | CWL + AL - 2CK | | | | CK | 38 |
| $R_{TT}$ synchronous turn-off delay | | ODTLoff | CWL + AL - 2CK | | | | CK | 40 |
| $R_{TT}$ turn-on from ODTL on reference | | $^{t}$AON | –195 | 195 | -180 | 180 | ps | 23, 38 |
| $R_{TT}$ turn-off from ODTL off reference | | $^{t}$AOF | 0.3 | 0.7 | 0.3 | 0.7 | CK | 39, 40 |
| Asynchronous $R_{TT}$ turn-on delay (power-down with DLL off) | | $^{t}$AONPD | MIN = 2; MAX = 8.5 | | | | ns | 38 |

| Parameter | Symbol | DDR3L-1866 | | DDR3L-2133 | | Unit | Notes |
|---|---|---|---|---|---|---|---|
| | | Min | Max | Min | Max | | |
| Asynchronous $R_{TT}$ turn-off delay (power-down with DLL off) | $^{t}$AOFPD | MIN = 2; MAX = 8.5 | | | | ns | 40 |
| ODT HIGH time with WRITE command and BL8 | ODTH8 | MIN = 6; MAX = N/A | | | | CK | |
| ODT HIGH time without WRITE command or with WRITE command and BC4 | ODTH4 | MIN = 4; MAX = N/A | | | | CK | |
| **Dynamic ODT Timing** | | | | | | | |
| $R_{TT,nom}$-to-$R_{TT(WR)}$ change skew | ODTLcnw | WL - 2CK | | | | CK | |
| $R_{TT(WR)}$-to-$R_{TT,nom}$ change skew -BC4 | ODTLcwn4 | 4CK + ODTLoff | | | | CK | |
| $R_{TT(WR)}$-to-$R_{TT,nom}$ change skew - BL8 | ODTLcwn8 | 6CK + ODTLoff | | | | CK | |
| RTT dynamic change skew | $^{t}$ADC | 0.3 | 0.7 | 0.3 | 0.7 | CK | 39 |
| **Write Leveling Timing** | | | | | | | |
| First DQS, DQS# rising edge | $^{t}$WLMRD | 40 | – | 40 | – | CK | |
| DQS, DQS# delay | $^{t}$WLDQSEN | 25 | – | 25 | – | CK | |
| Write leveling setup from rising CK, CK# crossing to rising DQS, DQS# crossing | $^{t}$WLS | 140 | – | 125 | – | ps | |
| Write leveling hold from rising DQS, DQS# crossing to rising CK, CK# crossing | $^{t}$WLH | 140 | – | 125 | – | ps | |
| Write leveling output delay | $^{t}$WLO | 0 | 7.5 | 0 | 7 | ns | |
| Write leveling output error | $^{t}$WLOE | 0 | 2 | 0 | 2 | ns | |

**Note:**

1. AC timing parameters are valid from specified $T_C$ MIN to $T_C$ MAX values.
2. All voltages are referenced to $V_{SS}$.
3. Output timings are only valid for $R_{ON34}$ output buffer selection.
4. The unit $^{t}$CK (AVG) represents the actual $^{t}$CK (AVG) of the input clock under operation. The unit CK represents one clock cycle of the input clock, counting the actual clock edges.
5. AC timing and $I_{DD}$ tests may use a $V_{IL}$-to-$V_{IH}$ swing of up to 900mV in the test environment, but input timing is still referenced to $V_{REF}$ (except $^{t}$IS, $^{t}$IH, $^{t}$DS, and $^{t}$DH use the AC/DC trip points and CK, CK# and DQS, DQS# use their crossing points). The minimum slew rate for the input signals used to test the device is 1 V/ns for single-ended inputs (DQs are at 2V/ns for DDR3-1866 and DDR3-2133) and 2 V/ns for differential inputs in the range between $V_{IL(AC)}$ and $V_{IH(AC)}$.
6. All timings that use time-based values (ns, µs, ms) should use $^{t}$CK (AVG) to determine the correct number of clocks (Electrical Characteristics and AC Operating Conditions table uses CK or $^{t}$CK [AVG] interchangeably). In the case of noninteger results, all minimum limits are to be rounded up to the nearestwhole integer, and all maximum limits are to be rounded down to the nearest whole integer.
7. Strobe or $DQS_{diff}$ refers to the DQS and DQS# differential crossing point when DQS is the rising edge. Clock or CK refers to the CK and CK# differential crossing point when CK is the rising edge.
8. This output load is used for all AC timing (except ODT reference timing) and slew rates. The actual test load may be different. The output signal voltage reference point is $V_{DDQ}$/2 for single-ended signals and the crossing point for differential signals (see Differential Output Signal figure).
9. When operating in DLL disable mode, does not warrant compliance with normal mode timings or

functionality.

10. The clock's $^{t}$CK (AVG) is the average clock over any 200 consecutive clocks and $^{t}$CK (AVG) MIN is the smallest clock rate allowed, with the exception of a deviation due to clock jitter. Input clock jitter is allowed provided it does not exceed values specified and must be of a random Gaussian distribution in nature.
11. Spread spectrum is not included in the jitter specification values. However, the input clock can accommodate spread-spectrum at a sweep rate in the range of 20–60 kHz with an additional 1% of $^{t}$CK (AVG) as a long-term jitter component; however, the spread spectrum may not use a clock rate below $^{t}$CK (AVG) MIN.
12. The clock's $^{t}$CH (AVG) and $^{t}$CL (AVG) are the average half clock period over any 200 consecutive clocks and is the smallest clock half period allowed, with the exception of a deviation due to clock jitter. Input clock jitter is allowed provided it does not exceed values specified and must be of a random Gaussian distribution in nature.
13. The period jitter ($^{t}$JITper) is the maximum deviation in the clock period from the average or nominal clock. It is allowed in either the positive or negative direction.
14. $^{t}$CH (ABS) is the absolute instantaneous clock high pulse width as measured from one rising edge to the following falling edge.
15. $^{t}$CL (ABS) is the absolute instantaneous clock low pulse width as measured from one falling edge to the following rising edge.
16. The cycle-to-cycle jitter $^{t}$JITcc is the amount the clock period can deviate from one cycle to the next. It is important to keep cycle-to-cycle jitter at a minimum during the DLL locking time.
17. The cumulative jitter error $^{t}$ERRnper, where *n* is the number of clocks between 2 and 50, is the amount of clock time allowed to accumulate consecutively away from the average clock over *n* number of clock cycles.
18. $^{t}$DS (base) and $^{t}$DH (base) values are for a single-ended 1 V/ns slew rate DQs (DQs are at 2V/ns for DDR3-1866 and DDR3-2133) and 2 V/ns slew rate differential DQS, DQS#; when DQ single-ended slew rate is 2V/ns, the DQS differential slew rate is 4V/ns.
19. These parameters are measured from a data signal (DM, DQ0, DQ1, and so forth) transition edge to its respective data strobe signal (DQS, DQS#) crossing.
20. The setup and hold times are listed converting the base specification values (to which derating tables apply) to $V_{REF}$ when the slew rate is 1 V/ns (DQs are at 2V/ns for DDR3-1866 and DDR3-2133). These values, with a slew rate of 1 V/ns (DQs are at 2V/ns for DDR3-1866 and DDR3-2133), are for reference only.
21. When the device is operated with input clock jitter, this parameter needs to be derated by the actual $^{t}$JITper (larger of $^{t}$JITper (MIN) or $^{t}$JITper (MAX) of the input clock (output deratings are relative to the SDRAM input clock).
22. Single-ended signal parameter.
23. The DRAM output timing is aligned to the nominal or average clock. Most output pa- rameters must be derated by the actual jitter error when input clock jitter is present, even when within specification. This results in each parameter becoming larger. The following parameters are required to be derated by subtracting $^{t}$ERR10per (MAX): $^{t}$DQSCK (MIN), $^{t}$LZDQS (MIN), $^{t}$LZDQ (MIN), and $^{t}$AON (MIN). The following parameters are re- quired to be derated by subtracting $^{t}$ERR10per (MIN): $^{t}$DQSCK (MAX), $^{t}$HZ (MAX), $^{t}$LZDQS (MAX), $^{t}$LZDQ MAX, and $^{t}$AON (MAX). The parameter $^{t}$RPRE (MIN) is derated by subtracting $^{t}$JITper (MAX), while $^{t}$RPRE (MAX) is derated by subtracting $^{t}$JITper (MIN).
24. The maximum preamble is bound by $^{t}$LZDQS (MAX).
25. These parameters are measured from a data strobe signal (DQS, DQS#) crossing to its respective clock signal (CK, CK#) crossing. The specification values are not affected by the amount of clock jitter applied, as these are relative to the clock signal crossing. These parameters should be met whether clock jitter is present.
26. The $^{t}$DQSCK (DLL_DIS) parameter begins CL + AL - 1 cycles after the READ command.
27. The maximum postamble is bound by $^{t}$HZDQS (MAX).
28. Commands requiring a locked DLL are: READ (and RDAP) and synchronous ODT commands. In addition, after any change of latency $^{t}$XPDLL, timing must be met.
29. $^{t}$IS (base) and $^{t}$IH (base) values are for a single-ended 1 V/ns control/command/address slew rate and 2 V/ns CK, CK# differential slew rate.
30. These parameters are measured from a command/address signal transition edge to its respective clock (CK, CK#) signal crossing. The specification values are not affected by the amount of clock jitter applied as the setup and hold times are relative to the clock signal crossing that latches the command/address. These parameters should be met whether clock jitter is present.

31. For these parameters, the DDR3 SDRAM device supports $^{t}n$PARAM ($n$CK) = RU($^{t}$PARAM [ns]/$^{t}$CK[AVG] [ns]), assuming all input clock jitter specifications are satisfied. For exam- ple, the device will support $^{t}n$RP ($n$CK) = RU($^{t}$RP/$^{t}$CK[AVG]) if all input clock jitter specifi- cations are met. This means that for DDR3-800 6-6-6, of which $^{t}$RP = 5ns, the device will support $^{t}n$RP = RU($^{t}$RP/$^{t}$CK[AVG]) = 6 as long as the input clock jitter specifications are met. That is, the PRECHARGE command at T0 and the ACTIVATE command at T0 + 6 are valid even if six clocks are less than 15ns due to input clock jitter.
32. During READs and WRITEs with auto precharge, the DDR3 SDRAM will hold off the internal PRECHARGE command until $^{t}$RAS (MIN) has been satisfied.
33. When operating in DLL disable mode, the greater of 4CK or 15ns is satisfied for $^{t}$WR.
34. The start of the write recovery time is defined as follows:
    - For BL8 (fixed by MRS or OTF): Rising clock edge four clock cycles after WL
    - For BC4 (OTF): Rising clock edge four clock cycles after WL
    - For BC4 (fixed by MRS): Rising clock edge two clock cycles after WL
35. RESET# should be LOW as soon as power starts to ramp to ensure the outputs are in High-Z. Until RESET# is LOW, the outputs are at risk of driving and could result in exces- sive current, depending on bus activity.
36. The refresh period is 64ms when $T_C$ is less than or equal to 85°C. This equates to an average refresh rate of 7.8125µs. However, nine REFRESH commands should be asserted at least once every 70.3µs. When $T_C$ is greater than 85°C, the refresh period is 32ms.
37. Although CKE is allowed to be registered LOW after a REFRESH command when $^{t}$REFPDEN (MIN) is satisfied, there are cases where additional time such as $^{t}$XPDLL (MIN) is required.
38. ODT turn-on time MIN is when the device leaves High-Z and ODT resistance begins to turn on. ODT turn-on time maximum is when the ODT resistance is fully on. The ODT reference load is shown in ODT Timing Reference Load figure. Designs that were created prior to JEDEC tightening the maximum limit from 9ns to 8.5ns will be allowed to have a 9ns maximum.
39. Half-clock output parameters must be derated by the actual $^{t}$ERR10per and $^{t}$JITdty when input clock jitter is present. This results in each parameter becoming larger. The parameters $^{t}$ADC (MIN) and $^{t}$AOF (MIN) are each required to be derated by subtracting both $^{t}$ERR10per (MAX) and $^{t}$JITdty (MAX). The parameters $^{t}$ADC (MAX) and $^{t}$AOF (MAX) are required to be derated by subtracting both $^{t}$ERR10per (MAX) and $^{t}$JITdty (MAX).
40. ODT turn-off time minimum is when the device starts to turn off ODT resistance. ODT turn-off time maximum is when the DRAM buffer is in High-Z. The ODT reference load is shown in ODT Timing Reference Load figure. This output load is used for ODT timings (see Reference Output Load for AC Timing and Output Slew Rate figure).
41. Pulse width of a input signal is defined as the width between the first crossing of $V_{REF(DC)}$ and the consecutive crossing of $V_{REF(DC)}$.
42. Should the clock rate be larger than $^{t}$RFC (MIN), an AUTO REFRESH command should have at least one NOP command between it and another AUTO REFRESH command. Additionally, if the clock rate is slower than 40ns (25 MHz), all REFRESH commands should be followed by a PRECHARGE ALL command.
43. DRAM devices should be evenly addressed when being accessed. Disproportionate accesses to a particular row address may result in a reduction of REFRESH characteristics or product lifetime.
44. When two $V_{IH(AC)}$ values (and two corresponding $V_{IL(AC)}$ values) are listed for a specific speed bin, the user may choose either value for the input AC level. Whichever value is used, the associated setup time for that AC level must also be used. Additionally, one $V_{IH(AC)}$ value may be used for address/command inputs and the other $V_{IH(AC)}$ value may be used for data inputs.

    For example, for DDR3-800, two input AC levels are defined: $V_{IH(AC175),min}$ and $V_{IH(AC150),min}$ (corresponding $V_{IL(AC175),min}$ and $V_{IL(AC150),min}$). For DDR3-800, the address/ command inputs must use either $V_{IH(AC175),min}$ with $^{t}$IS(AC175) of 200ps or $V_{IH(AC150),min}$ with $^{t}$IS(AC150) of 350ps; independently, the data inputs must use either $V_{IH(AC175),min}$ with $^{t}$DS(AC175) of 75ps or $V_{IH(AC150),min}$ with $^{t}$DS(AC150) of 125ps.

## Command and Address Setup, Hold, and Derating

The total tIS (setup time) and tIH (hold time) required is calculated by adding the data sheet tIS (base) and tIH (base) values (see Command and Address Setup and Hold Values 1 V/ns Referenced – AC/DC-Based table; values come from the Electrical Characteristics and AC Operatioing Conditions Table to the ΔtIS and ΔtIH derating values (see Derating Values for $^{t}$IS/$^{t}$IH – AC135/DC90-Based or Derating Values for $^{t}$IS/$^{t}$IH – AC125/DC90-Based table) respectively.

Example: $^{t}$IS (total setup time) = $^{t}$IS (base) + Δ$^{t}$IS. For a valid transition, the input signal has to remain above/below $V_{IH(AC)}$/$V_{IL(AC)}$ for some time $^{t}$VAC (see Minimum Required Time $^{t}$VAC Above $V_{IH(AC)}$ (Below $V_{IL[AC]}$) for Valid ADD/CMD Transition table).

Although the total setup time for slow slew rates might be negative (for example, a valid input signal will not have reached $V_{IH(AC)}$/$V_{IL(AC)}$ at the time of the rising clock transition), a valid input signal is still required to complete the transition and to reach $V_{IH(AC)}$/$V_{IL(AC)}$ (see Input Signal figure for input signal requirements). For slew rates that fall between the values listed in Derating Values for $^{t}$IS/$^{t}$IH – AC125/DC90-Based table, the derating values may be obtained by linear interpolation.

Setup ($^{t}$IS) nominal slew rate for a rising signal is defined as the slew rate between the last crossing of $V_{REF(DC)}$ and the first crossing of $V_{IH(AC)min}$. Setup ($^{t}$IS) nominal slew rate for a falling signal is defined as the slew rate between the last crossing of $V_{REF(DC)}$ and the first crossing of $V_{IL(AC)max}$. If the actual signal is always earlier than the nominal slew rate line between the shaded $V_{REF(DC)}$-to-AC region, use the nominal slew rate for derat- ing value (see Nominal Slew Rate and $^{t}$VAC for tIS (Command and Address – Clock) figure). If the actual signal is later than the nominal slew rate line anywhere between the shaded $V_{REF(DC)}$-to-AC region, the slew rate of a tangent line to the actual signal from the AC level to the DC level is used for derating value (see Tangent Line for $^{t}$IS (Command and Address – Clock) figure).

Hold ($^{t}$IH) nominal slew rate for a rising signal is defined as the slew rate between the last crossing of $V_{IL(DC)max}$ and the first crossing of $V_{REF(DC)}$. Hold ($^{t}$IH) nominal slew rate for a falling signal is defined as the slew rate between the last crossing of $V_{IH(DC)min}$ and the first crossing of $V_{REF(DC)}$. If the actual signal is always later than the nominal slew rate line between the shaded DC-to-$V_{REF(DC)}$ region, use the nominal slew rate for derating value (see Nominal Slew Rate for $^{t}$IH (Command and Address – Clock) figure). If the actual signal is earlier than the nominal slew rate line anywhere between the shaded DC-to-$V_{REF(DC)}$ region, the slew rate of a tangent line to the actual signal from the DC level to the $V_{REF(DC)}$ level is used for derating value (see Tangent Line for $^{t}$IH (Command and Address – Clock) figure).

**DDR3L Command and Address Setup and Hold Values 1 V/ns Referenced – AC/DC-Based**

| Symbol | 1866 | 2133 | Unit | Reference |
|---|---|---|---|---|
| $^{t}$IS(base, AC135) | 65 | 60 | ps | $V_{IH(AC)}/V_{IL(AC)}$ |
| $^{t}$IS(base, AC125) | 150 | 135 | ps | $V_{IH(AC)}/V_{IL(AC)}$ |
| $^{t}$IH(base, DC90) | 110 | 105 | ps | $V_{IH(DC)}/V_{IL(DC)}$ |

**DDR3L-1866 / 2133 Derating Values for $^{t}$IS/$^{t}$IH – AC125/DC90-Based**

| ΔtIS, ΔtIH Derating (ps) – AC/DC-Based | | | | | | | | | | | | | | | | |
|---|---|---|---|---|---|---|---|---|---|---|---|---|---|---|---|---|
| CMD/ADDR Slew Rate V/ns | CK, CK# Differential Slew Rate | | | | | | | | | | | | | | | |
| | 4.0 V/ns | | 3.0 V/ns | | 2.0 V/ns | | 1.8 V/ns | | 1.6 V/ns | | 1.4 V/ns | | 1.2 V/ns | | 1.0 V/ns | |
| | ΔtIS | ΔtIH | ΔtIS | ΔtIH | ΔtIS | ΔtIH | ΔtIS | ΔtIH | ΔtIS | ΔtIH | ΔtIS | ΔtIH | ΔtIS | ΔtIH | ΔtIS | ΔtIH |
| 2.0 | 63 | 45 | 63 | 45 | 63 | 45 | 71 | 53 | 79 | 61 | 87 | 69 | 95 | 79 | 103 | 95 |
| 1.5 | 42 | 30 | 42 | 30 | 42 | 30 | 50 | 38 | 58 | 46 | 66 | 54 | 74 | 64 | 82 | 80 |
| 1.0 | 0 | 0 | 0 | 0 | 0 | 0 | 8 | 8 | 16 | 16 | 24 | 24 | 32 | 34 | 40 | 50 |
| 0.9 | 3 | –3 | 3 | –3 | 3 | –3 | 11 | 5 | 19 | 13 | 27 | 21 | 35 | 31 | 43 | 47 |
| 0.8 | 6 | –8 | 6 | –8 | 6 | –8 | 14 | 1 | 22 | 9 | 30 | 17 | 38 | 27 | 46 | 43 |
| 0.7 | 10 | –13 | 10 | –13 | 10 | –13 | 18 | –5 | 26 | 3 | 34 | 11 | 42 | 21 | 50 | 37 |
| 0.6 | 16 | –20 | 16 | –20 | 16 | –20 | 24 | –12 | 32 | –4 | 40 | 4 | 48 | 14 | 56 | 30 |
| 0.5 | 15 | –30 | 15 | –30 | 15 | –30 | 23 | –22 | 31 | –14 | 39 | –6 | 47 | 4 | 55 | 20 |
| 0.4 | 13 | –45 | 13 | –45 | 13 | –45 | 21 | –37 | 29 | –29 | 37 | –21 | 45 | –11 | 53 | 5 |

**DDR3L Minimum Required Time $_{t}$VAC Above $V_{IH(AC)}$ (Below $V_{IL[AC]}$) for Valid ADD/CMD Transition**

| Slew Rate (V/ns) | DDR3L-1866 / 2133 | |
|---|---|---|
| | $^{t}$VAC at 135mV (ps) | $^{t}$VAC at 125mV (ps) |
| >2.0 | 200 | 205 |
| 2.0 | 200 | 205 |
| 1.5 | 178 | 184 |
| 1.0 | 133 | 143 |
| 0.9 | 118 | 129 |
| 0.8 | 99 | 111 |
| 0.7 | 75 | 89 |
| 0.6 | 43 | 59 |
| 0.5 | Note 1 | 18 |
| <0.5 | Note 1 | 18 |

**Note:** 1. Rising input signal shall become equal to or greater than $V_{IH(AC)}$ level and Falling input signal shall become equal to or less than $V_{IL(AC)}$ level.

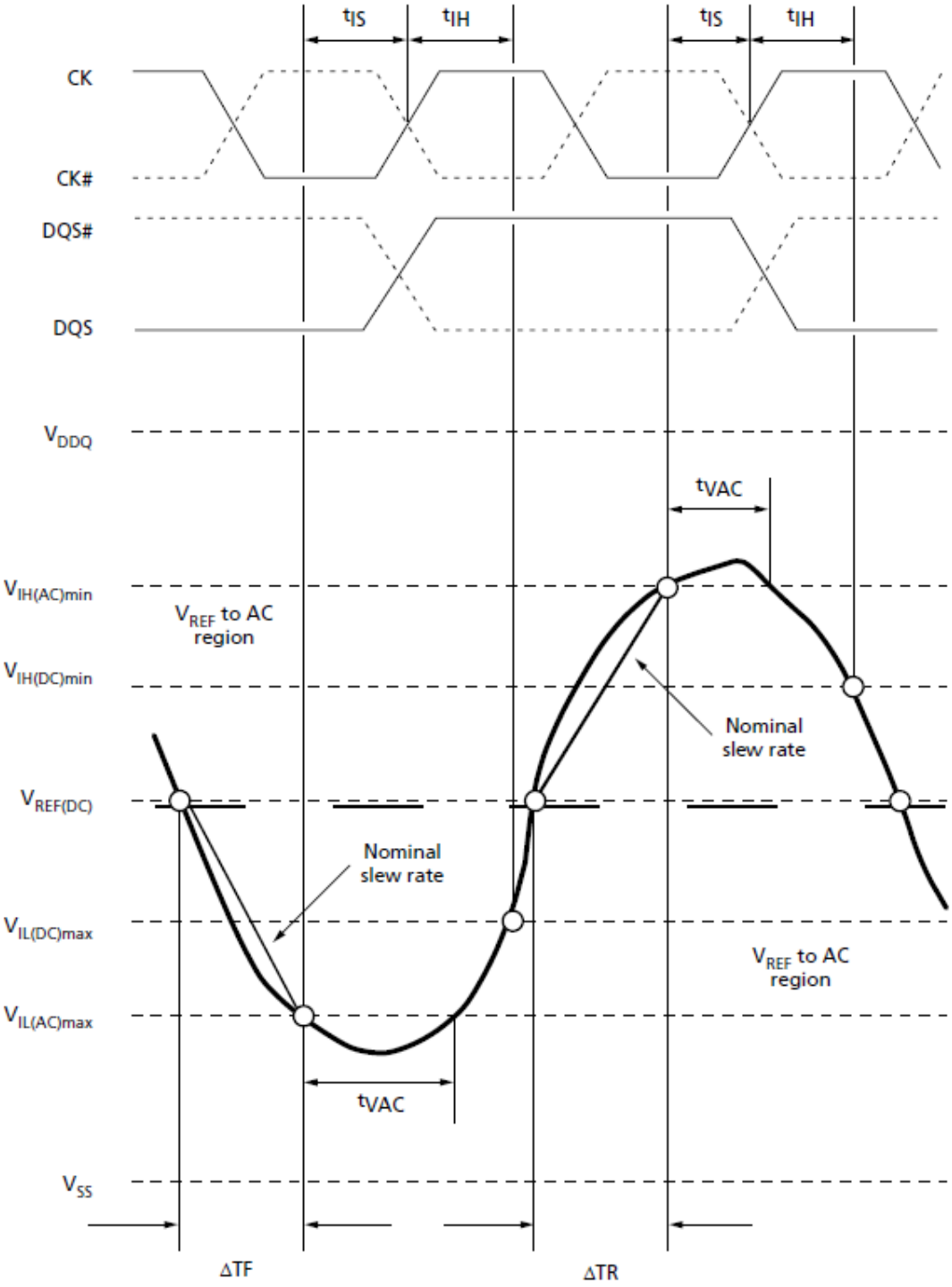


$$\text{Setup slew rate falling signal} = \frac{V_{REF(DC)} - V_{IL(AC)max}}{\Delta TF}$$

$$\text{Setup slew rate rising signal} = \frac{V_{IH(AC)min} - V_{REF(DC)}}{\Delta TR}$$

Note: 1. The clock and the strobe are drawn on different time scales.

**Nominal Slew Rate and $^{t}$VAC for tIS (Command and Address – Clock)**

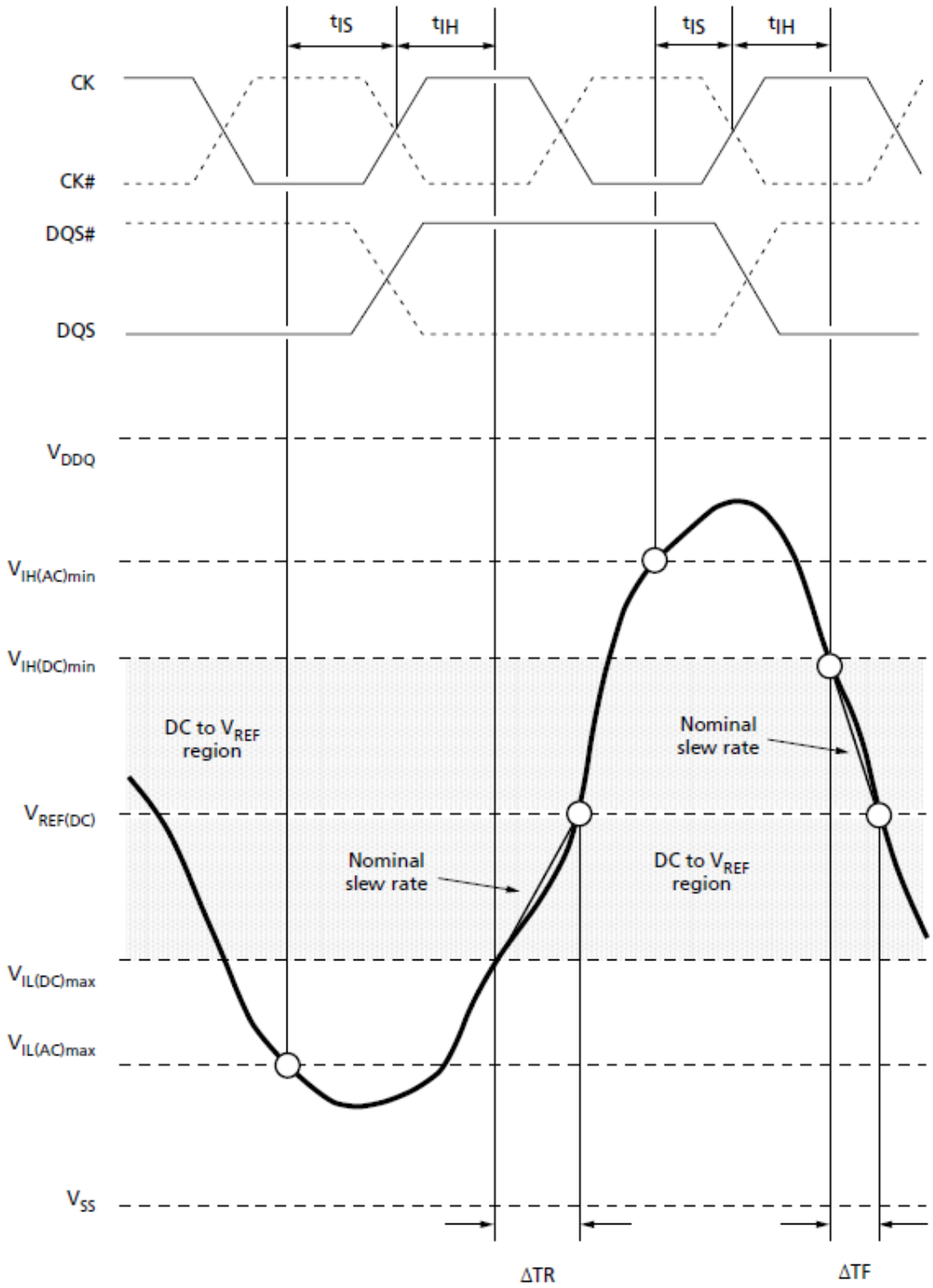


$$\text{Hold slew rate rising signal} = \frac{V_{REF(DC)} - V_{IL(DC)max}}{\Delta TR}$$

$$\text{Hold slew rate falling signal} = \frac{V_{IH(DC)min} - V_{REF(DC)}}{\Delta TF}$$

Note: 1. The clock and the strobe are drawn on different time scales.

**Nominal Slew Rate for $^{t}$IH (Command and Address – Clock)**

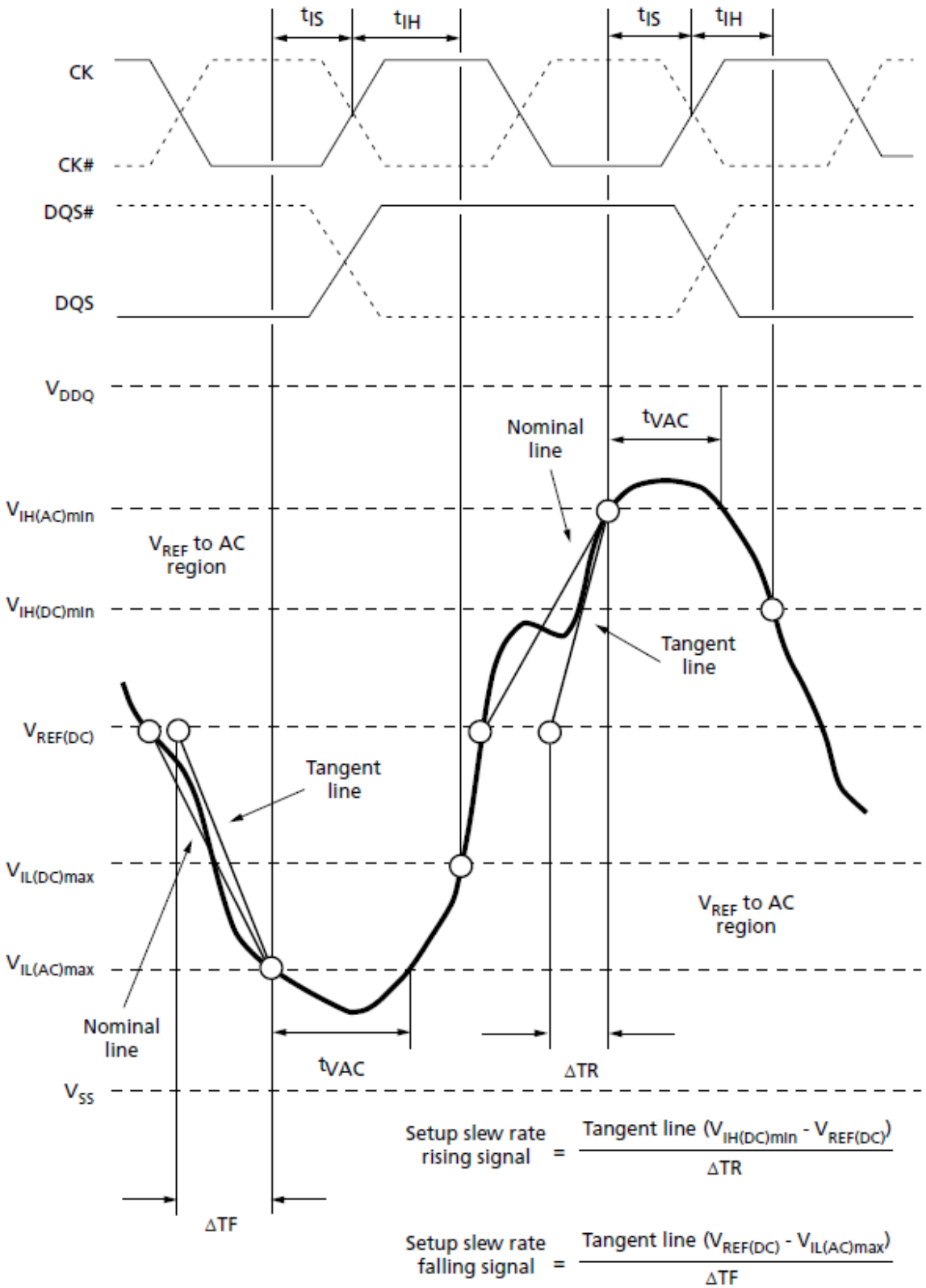


Note: 1. The clock and the strobe are drawn on different time scales.

**Tangent Line for $^{t}$IS (Command and Address – Clock)**

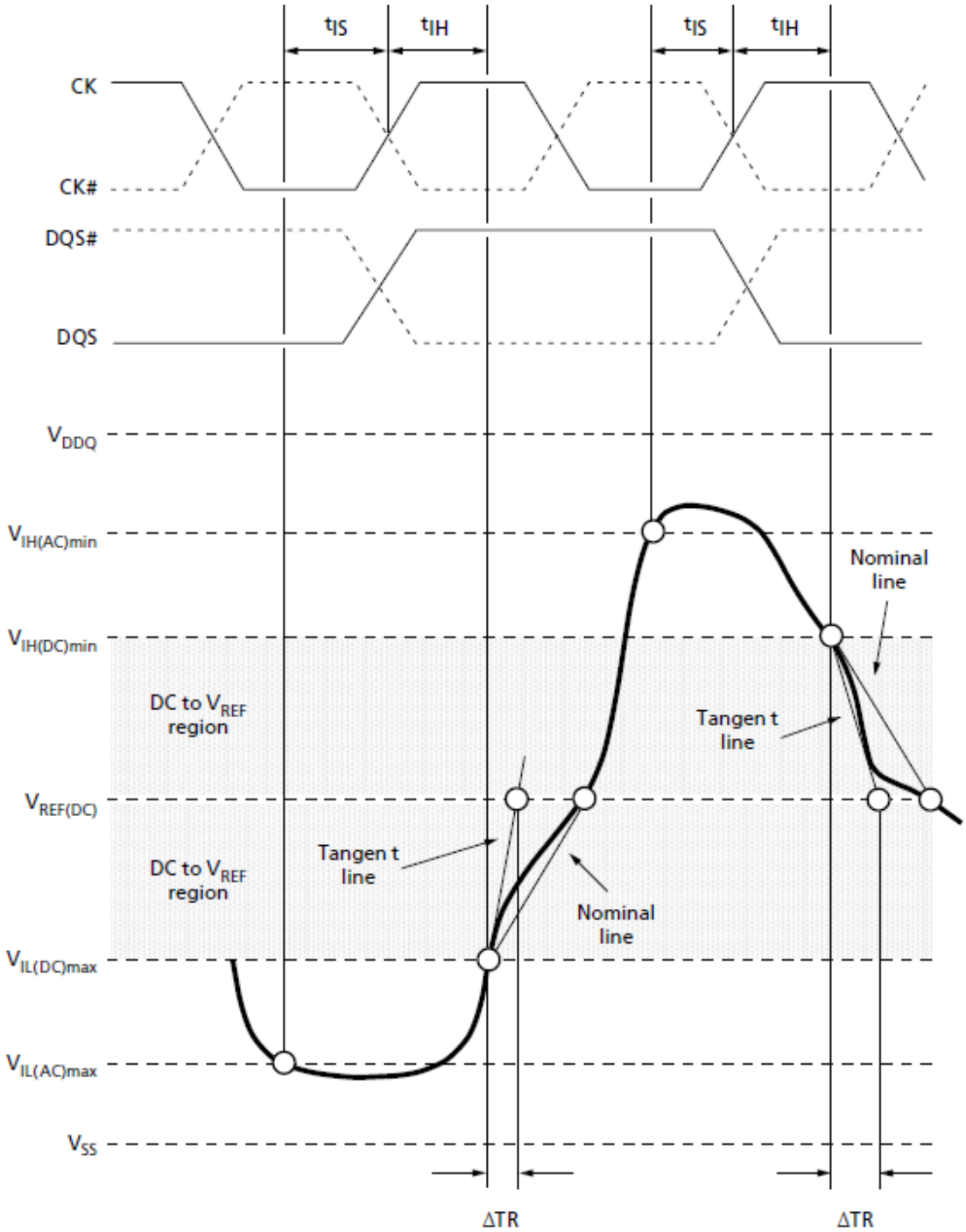


$$\text{Hold slew rate rising signal} = \frac{\text{Tangent line } (V_{REF(DC)} - V_{IL(DC)max})}{\Delta TR}$$

$$\text{Hold slew rate falling signal} = \frac{\text{Tangent line } (V_{IH(DC)min} - V_{REF(DC)})}{\Delta TF}$$

Note: 1. The clock and the strobe are drawn on different time scales.

**Tangent Line for $^{t}$IH (Command and Address – Clock)**

## Data Setup, Hold, and Derating

The total $^{t}$DS (setup time) and $^{t}$DH (hold time) required is calculated by adding the data sheet $^{t}$DS (base) and $^{t}$DH (base) values (see Data Setup and Hold Values at 1 V/ns (DQS, DQS# at 2 V/ns) – AC/DC-Based table; values come from the Electrical Characteristics and AC Operatioing Conditions Table to the $\Delta^{t}$DS and $\Delta^{t}$DH derating values (see Derating Values for $^{t}$DS/$^{t}$DH – AC135/DC100-Based table) respectively. Example: $^{t}$DS (total setup time) = $^{t}$DS (base) + $\Delta^{t}$DS. For a valid transition, the input signal has to remain above/below $V_{IH(AC)}$/$V_{IL(AC)}$ for some time $^{t}$VAC (see Minimum Required Time $^{t}$VAC Above $V_{IH(AC)}$ (Below $V_{IL(AC)}$) for Valid DQ Transition table).

Although the total setup time for slow slew rates might be negative (for example, a valid input signal will not have reached $V_{IH(AC)}$/$V_{IL(AC)}$) at the time of the rising clock transition), a valid input signal is still required to complete the transition and to reach $V_{IH}$/$V_{IL(AC)}$. For slew rates that fall between the values listed in Derating Values for $^{t}$DS/$^{t}$DH – AC135/DC100-Based table), the derating values may obtained by linear interpolation.

Setup ($^{t}$DS) nominal slew rate for a rising signal is defined as the slew rate between the last crossing of $V_{REF(DC)}$ and the first crossing of $V_{IH(AC)min}$. Setup ($^{t}$DS) nominal slew rate for a falling signal is defined as the slew rate between the last crossing of $V_{REF(DC)}$ and the first crossing of $V_{IL(AC)max}$. If the actual signal is always earlier than the nominal slew rate line between the shaded $V_{REF(DC)}$-to-AC region, use the nominal slew rate for derating value (see Nominal Slew Rate and $^{t}$VAC for $^{t}$DS (DQ – Strobe) figure). If the actual signal is later than the nominal slew rate line anywhere between the shaded $V_{REF(DC)}$-to-AC region, the slew rate of a tangent line to the actual signal from the AC level to the DC level is used for derating value (see Tangent Line for $^{t}$DS (DQ – Strobe) figure).

Hold ($^{t}$DH) nominal slew rate for a rising signal is defined as the slew rate between the last crossing of $V_{IL(DC)}$max and the first crossing of $V_{REF(DC)}$. Hold ($^{t}$DH) nominal slew rate for a falling signal is defined as the slew rate between the last crossing of $V_{IH(DC)min}$ and the first crossing of $V_{REF(DC)}$. If the actual signal is always later than the nominal slew rate line between the shaded DC-to-$V_{REF(DC)}$ region, use the nominal slew rate for derating value (see Nominal Slew Rate for $^{t}$DH (DQ – Strobe) figure). If the actual signal is earlier than the nominal slew rate line anywhere between the shaded DC-to-$V_{REF(DC)}$ region, the slew rate of a tangent line to the actual signal from the DC-to-$V_{REF(DC)}$ region is used for derating value (see Tangent Line for $^{t}$DH (DQ – Strobe)).

### DDR3L Data Setup and Hold Values at 1 V/ns (DQS, DQS# at 2 V/ns) – AC/DC-Based

| Symbol | 1866 | 2133 | Unit | Reference |
|---|---|---|---|---|
| $^{t}$DS (base) AC130 | 70 | 55 | ps | $V_{IH(AC)}/V_{IL(AC)}$ |
| $^{t}$DH (base) DC90 | 75 | 60 | ps | |
| Slew Rate Referenced | 2 | 2 | V/ns | |

### DDR3L Derating Values for $^{t}$DS/$^{t}$DH – AC130/DC100-Based at 2V/ns

Shaded cells indicate slew rate combinations not supported

| ΔtDS, ΔtDH Derating (ps) – AC/DC-Based | | | | | | | | | | | | | | | | | | | | | | | | |
|---|---|---|---|---|---|---|---|---|---|---|---|---|---|---|---|---|---|---|---|---|---|---|---|---|
| DQ Slew Rate V/ns | DQS, DQS# Differential Slew Rate | | | | | | | | | | | | | | | | | | | | | | | |
| | 8.0 V/ns | | 7.0 V/ns | | 6.0 V/ns | | 5.0 V/ns | | 4.0 V/ns | | 3.0 V/ns | | 2.0 V/ns | | 1.8 V/ns | | 1.6 V/ns | | 1.4 V/ns | | 1.2 V/ns | | 1.0 V/ns | |
| | Δ$^{t}$DS | Δ$^{t}$DH | Δ$^{t}$DS | Δ$^{t}$DH | Δ$^{t}$DS | Δ$^{t}$DH | Δ$^{t}$DS | Δ$^{t}$DH | Δ$^{t}$DS | Δ$^{t}$DH | Δ$^{t}$DS | Δ$^{t}$DH | Δ$^{t}$DS | Δ$^{t}$DH | Δ$^{t}$DS | Δ$^{t}$DH | Δ$^{t}$DS | Δ$^{t}$DH | Δ$^{t}$DS | Δ$^{t}$DH | Δ$^{t}$DS | Δ$^{t}$DH | Δ$^{t}$DS | Δ$^{t}$DH |
| 4.0 | 33 | 23 | 33 | 23 | 33 | 23 | | | | | | | | | | | | | | | | | | |
| 3.5 | 28 | 19 | 28 | 19 | 28 | 19 | 28 | 19 | | | | | | | | | | | | | | | | |
| 3.0 | 22 | 15 | 22 | 15 | 22 | 15 | 22 | 15 | 22 | 15 | | | | | | | | | | | | | | |
| 2.5 | | | 13 | 9 | 13 | 9 | 13 | 9 | 13 | 9 | 13 | 9 | | | | | | | | | | | | |
| 2.0 | | | | | 0 | 0 | 0 | 0 | 0 | 0 | 0 | 0 | 0 | 0 | | | | | | | | | | |
| 1.5 | | | | | | | –22 | –15 | –22 | –15 | –22 | –15 | –22 | –15 | –14 | –7 | | | | | | | | |
| 1.0 | | | | | | | | | –65 | –45 | –65 | –45 | –65 | –45 | –57 | –37 | –49 | –29 | | | | | | |
| 0.9 | | | | | | | | | | | –62 | –48 | –62 | –48 | –54 | –40 | –46 | –32 | –38 | –24 | | | | |
| 0.8 | | | | | | | | | | | | | –61 | –53 | –53 | –45 | –45 | –37 | –37 | –29 | –29 | –19 | | |
| 0.7 | | | | | | | | | | | | | | | –49 | –50 | –41 | -42 | –33 | –34 | –25 | –24 | –17 | –8 |
| 0.6 | | | | | | | | | | | | | | | | | –37 | -49 | –29 | –41 | –21 | –31 | –13 | –15 |
| 0.5 | | | | | | | | | | | | | | | | | | | –31 | –51 | –23 | –41 | –15 | –25 |
| 0.4 | | | | | | | | | | | | | | | | | | | | | –28 | –56 | –20 | –40 |

**DDR3L Minimum Required Time $^{t}$VAC Above $V_{IH(AC)}$ (Below $V_{IL(AC)}$) for Valid DQ Transition**

| Slew Rate (V/ns) | DDR3L-1866/2133<br>130mV (ps) min |
|---|---|
| >2.0 | 95 |
| 2.0 | 95 |
| 1.5 | 73 |
| 1.0 | 30 |
| 0.9 | 16 |
| 0.8 | Note1 |
| 0.7 | – |
| 0.6 | – |
| 0.5 | – |
| <0.5 | – |

**Note:** 1. Rising input signal shall become equal to or greater than $V_{IH(AC)}$ level and Falling input signal shall become equal to or less than $V_{IL(AC)}$ level.

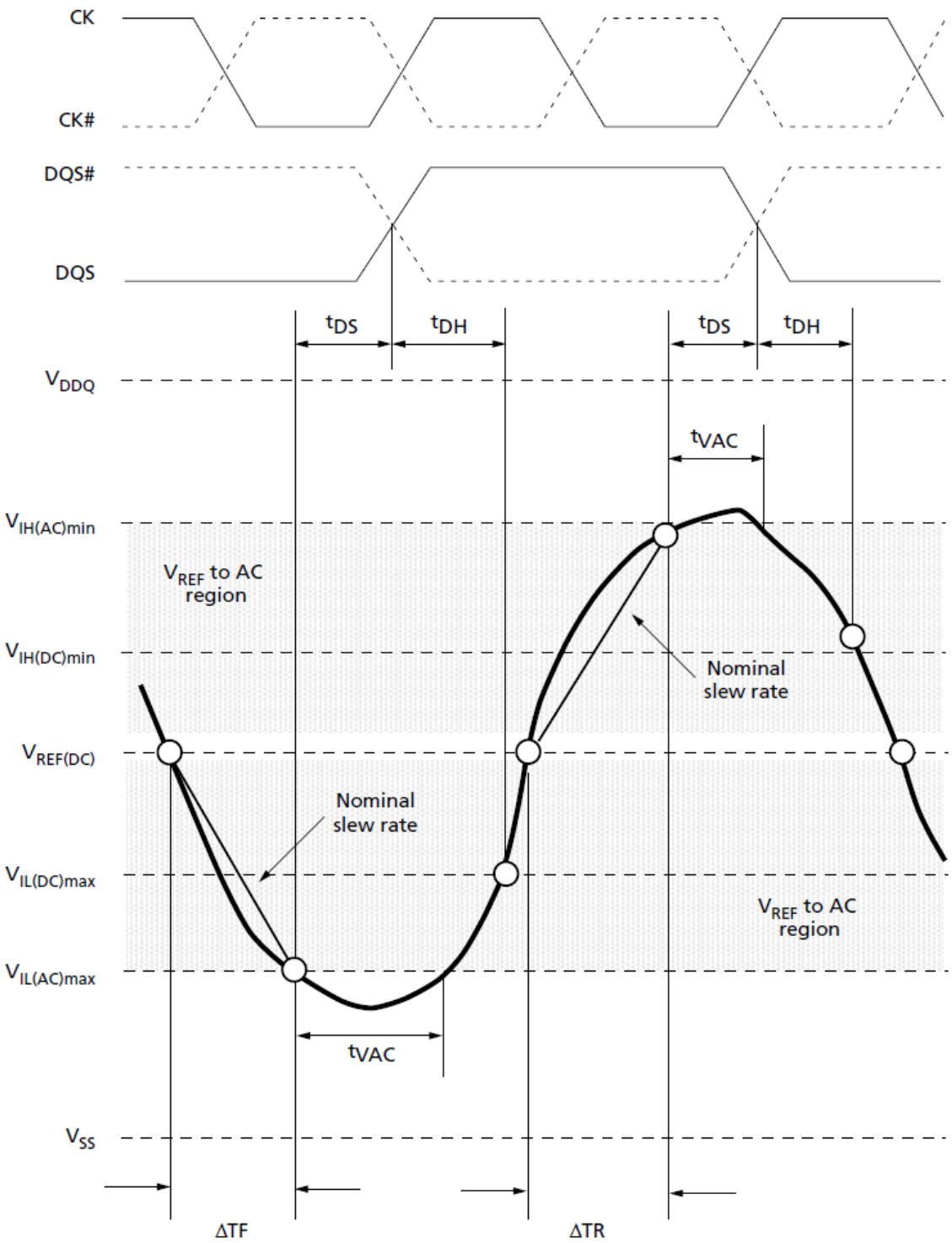


$$\text{Setup slew rate falling signal} = \frac{V_{REF(DC)} - V_{IL(AC)max}}{\Delta TF}$$

$$\text{Setup slew rate rising signal} = \frac{V_{IH(AC)min} - V_{REF(DC)}}{\Delta TR}$$

Note: 1. The clock and the strobe are drawn on different time scales.

**Nominal Slew Rate and $^{t}$VAC for $^{t}$DS (DQ – Strobe) figure**

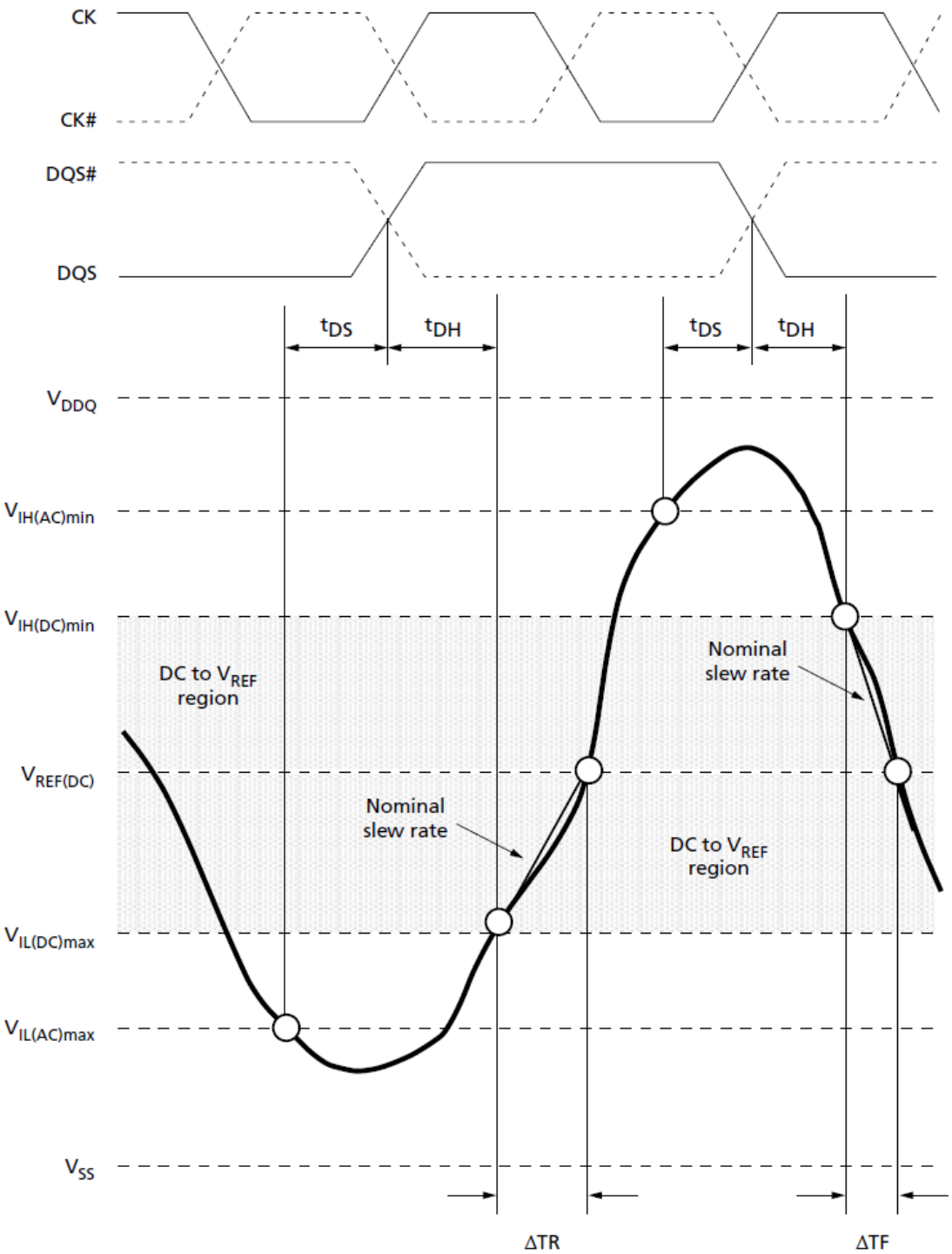


$$\text{Hold slew rate rising signal} = \frac{V_{REF(DC)} - V_{IL(DC)max}}{\Delta TR}$$

$$\text{Hold slew rate falling signal} = \frac{V_{IL(DC)min} - V_{REF(DC)}}{\Delta TF}$$

Note: 1. The clock and the strobe are drawn on different time scales.

**Nominal Slew Rate for $^{t}$DH (DQ – Strobe)**

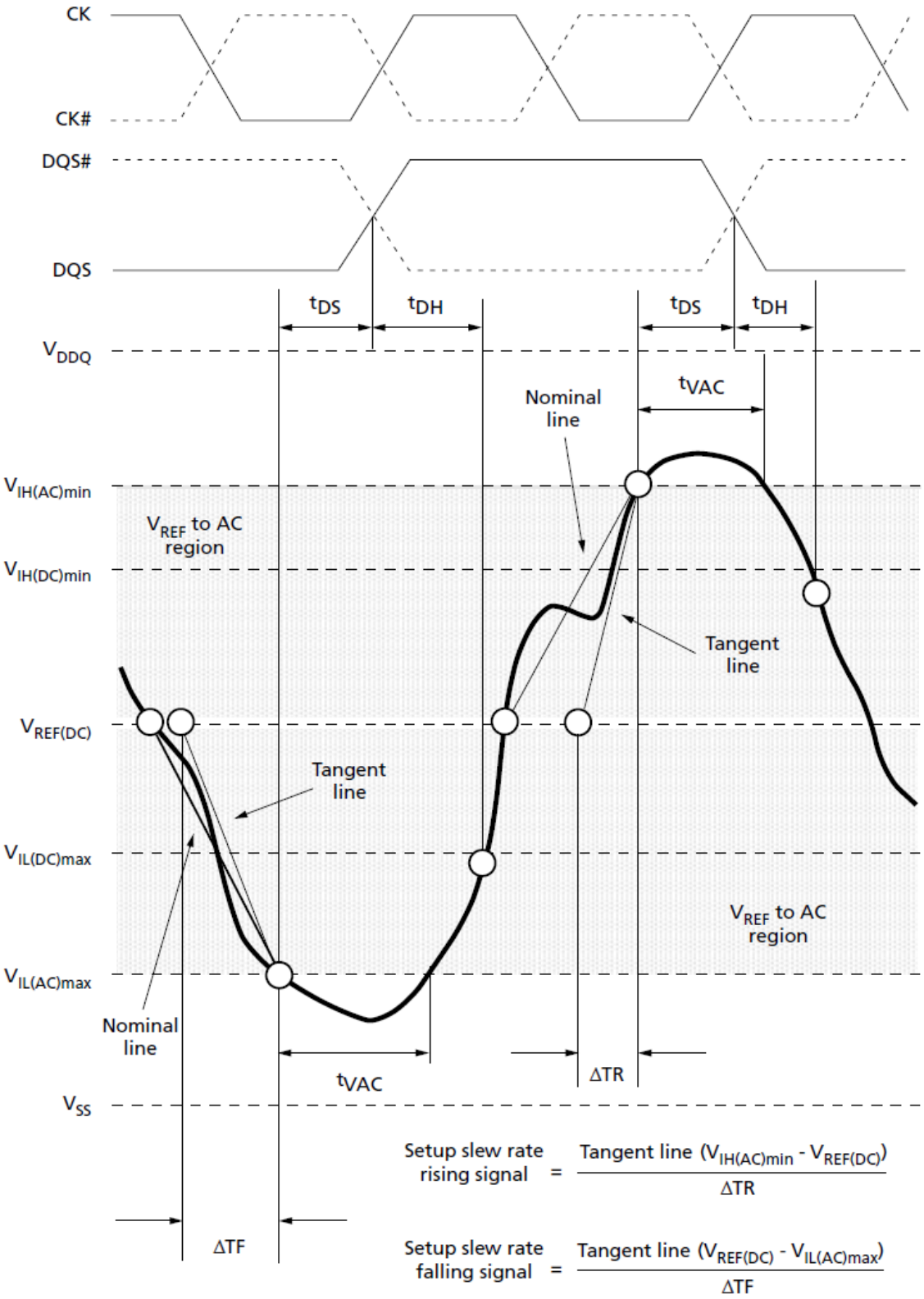


Note: 1. The clock and the strobe are drawn on different time scales.

**Tangent Line for $^{t}$DS (DQ – Strobe)**

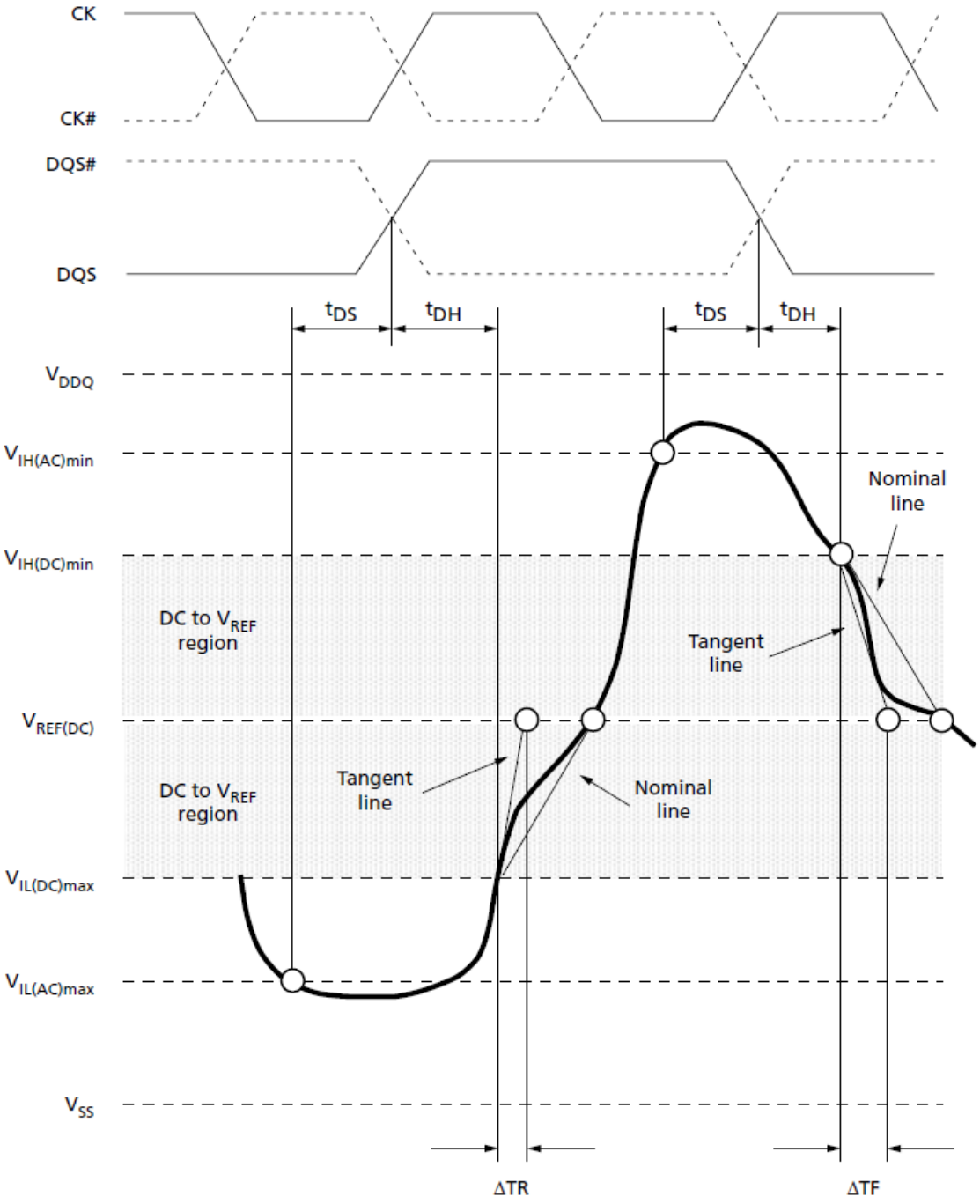


$$\text{Hold slew rate rising signal} = \frac{\text{Tangent line } (V_{REF(DC)} - V_{IL(DC)max})}{\Delta TR}$$

$$\text{Hold slew rate falling signal} = \frac{\text{Tangent line } (V_{IH(DC)min} - V_{REF(DC)})}{\Delta TF}$$

Note: 1. The clock and the strobe are drawn on different time scales.

**Tangent Line for $^{t}$DH (DQ – Strobe)**

## Commands – Truth Tables

### Truth Table – Command

Notes 1–5 apply to the entire table

| Function | | Symbol | CKE Prev. Cycle | CKE Next Cycle | CS# | RAS# | CAS# | WE# | BA [2:0] | An | A12 | A10 | A[11, 9:0] | Notes |
|---|---|---|---|---|---|---|---|---|---|---|---|---|---|---|
| MODE REGISTER SET | | MRS | H | H | L | L | L | L | BA | OP code | | | | |
| REFRESH | | REF | H | H | L | L | L | H | V | V | V | V | V | |
| Self refresh entry | | SRE | H | L | L | L | L | H | V | V | V | V | V | 6 |
| Self refresh exit | | SRX | L | H | H | V | V | V | V | V | V | V | V | 6, 7 |
| | | | | | L | H | H | H | | | | | | |
| Single-bank PRECHARGE | | PRE | H | H | L | L | H | L | BA | V | V | L | V | |
| PRECHARGE all banks | | PREA | H | H | L | L | H | L | V | | V | H | V | |
| Bank ACTIVATE | | ACT | H | H | L | L | H | H | BA | Row address (RA) | | | | |
| WRITE | BL8MRS, BC4MRS | WR | H | H | L | H | L | L | BA | RFU | V | L | CA | 8 |
| | BC4OTF | WRS4 | H | H | L | H | L | L | BA | RFU | L | L | CA | 8 |
| | BL8OTF | WRS8 | H | H | L | H | L | L | BA | RFU | H | L | CA | 8 |
| WRITE with auto precharge | BL8MRS, BC4MRS | WRAP | H | H | L | H | L | L | BA | RFU | V | H | CA | 8 |
| | BC4OTF | WRAPS4 | H | H | L | H | L | L | BA | RFU | L | H | CA | 8 |
| | BL8OTF | WRAPS8 | H | H | L | H | L | L | BA | RFU | H | H | CA | 8 |
| READ | BL8MRS, BC4MRS | RD | H | H | L | H | L | H | BA | RFU | V | L | CA | 8 |
| | BC4OTF | RDS4 | H | H | L | H | L | H | BA | RFU | L | L | CA | 8 |
| | BL8OTF | RDS8 | H | H | L | H | L | H | BA | RFU | H | L | CA | 8 |
| READ with auto precharge | BL8MRS, BC4MRS | RDAP | H | H | L | H | L | H | BA | RFU | V | H | CA | 8 |
| | BC4OTF | RDAPS4 | H | H | L | H | L | H | BA | RFU | L | H | CA | 8 |
| | BL8OTF | RDAPS8 | H | H | L | H | L | H | BA | RFU | H | H | CA | 8 |
| NO OPERATION | | NOP | H | H | L | H | H | H | V | V | V | V | V | 9 |
| Device DESELECTED | | DES | H | H | H | X | X | X | X | X | X | X | X | 10 |
| Power-down entry | | PDE | H | L | L | H | H | H | V | V | V | V | V | 6 |
| | | | | | H | V | V | V | | | | | | |
| Power-down exit | | PDX | L | H | L | H | H | H | V | V | V | V | V | 6, 11 |
| | | | | | H | V | V | V | | | | | | |
| ZQ CALIBRATION LONG | | ZQCL | H | H | L | H | H | L | X | X | X | H | X | 12 |
| ZQ CALIBRATION SHORT | | ZQCS | H | H | L | H | H | L | X | X | X | L | X | |

**Note:**

1. Commands are defined by the states of CS#, RAS#, CAS#, WE#, and CKE at the rising edge of the clock. The MSB of BA, RA, and CA are device-, density-, and configuration- dependent.
2. RESET# is enabled LOW and used only for asynchronous reset. Thus, RESET# must be held HIGH during any normal operation.
3. The state of ODT does not affect the states described in this table.

4. Operations apply to the bank defined by the bank address. For MRS, BA selects one of four mode registers.
5. “V” means “H” or “L” (a defined logic level), and “X” means “Don’t Care.”
6. See Truth Table – CKE table for additional information on CKE transition.
7. Self refresh exit is asynchronous.
8. Burst READs or WRITEs cannot be terminated or interrupted. MRS (fixed) and OTF BL/BC are defined in MR0.
9. The purpose of the NOP command is to prevent the DRAM from registering any unwan- ted commands. A NOP will not terminate an operation that is executing.
10. The DES and NOP commands perform similarly.
11. The power-down mode does not perform any REFRESH operations.
12. ZQ CALIBRATION LONG is used for either ZQinit (first ZQCL command during initializa- tion) or ZQoper (ZQCL command after initialization).

## Truth Table – CKE

Notes 1–2 apply to the entire table; see Truth Table – Command table for additional command details

| Current State[3] | CKE | | Command[5] (RAS#, CAS#, WE#, CS#) | Action[5] | Notes |
|---|---|---|---|---|---|
| | Previous Cycle[4] (n - 1) | Present Cycle[4] (n) | | | |
| Power-down | L | L | "Don't Care" | Maintain power-down | |
| | L | H | DES or NOP | Power-down exit | |
| Self refresh | L | L | "Don't Care" | Maintain self refresh | |
| | L | H | DES or NOP | Self refresh exit | |
| Bank(s) active | H | L | DES or NOP | Active power-down entry | |
| Reading | H | L | DES or NOP | Power-down entry | |
| Writing | H | L | DES or NOP | Power-down entry | |
| Precharging | H | L | DES or NOP | Power-down entry | |
| Refreshing | H | L | DES or NOP | Precharge power-down entry | |
| All banks idle | H | L | DES or NOP | Precharge power-down entry | 6 |
| | H | L | REFRESH | Self refresh | |

**Note:**

1. All states and sequences not shown are illegal or reserved unless explicitly described elsewhere in this document.
2. $^{t}$CKE (MIN) means CKE must be registered at multiple consecutive positive clock edges. CKE must remain at the valid input level the entire time it takes to achieve the required number of registration clocks. Thus, after any CKE transition, CKE may not transition from its valid level during the time period of tIS + $^{t}$CKE (MIN) + $^{t}$IH.
3. Current state = The state of the DRAM immediately prior to clock edge n.
4. CKE (n) is the logic state of CKE at clock edge n; CKE (n - 1) was the state of CKE at the previous clock edge.
5. COMMAND is the command registered at the clock edge (must be a legal command as defined in Truth Table – Command table). Action is a result of COMMAND. ODT does not affect the states described in this table and is not listed.
6. Idle state = All banks are closed, no data bursts are in progress, CKE is HIGH, and all timings from previous operations are satisfied. All self refresh exit and power-down exit pa- rameters are also satisfied.

## Commands

### DESELECT

The DESELT (DES) command (CS# HIGH) prevents new commands from being executed by the DRAM. Operations already in progress are not affected.

### NO OPERATION

The NO OPERATION (NOP) command (CS# LOW) prevents unwanted commands from being registered during idle or wait states. Operations already in progress are not affected.

### ZQ CALIBRATION LONG

The ZQ CALIBRATION LONG (ZQCL) command is used to perform the initial calibration during a power-up initialization and reset sequence (see Initialization Sequence figure).

This command may be issued at any time by the controller, depending on the system environment. The ZQCL command triggers the calibration engine inside the DRAM. After calibration is achieved, the calibrated values are transferred from the calibration engine to the DRAM I/O, which are reflected as updated RON and ODT values.

The DRAM is allowed a timing window defined by either $^{t}$ZQinit or $^{t}$ZQoper to perform a full calibration and transfer of values. When ZQCL is issued during the initialization sequence, the timing parameter $^{t}$ZQinit must be satisfied. When initialization is complete,subsequent ZQCL commands require the timing parameter $^{t}$ZQoper to be satisfied.

### ZQ CALIBRATION SHORT

The ZQ CALIBRATION SHORT (ZQCS) command is used to perform periodic calibrations to account for small voltage and temperature variations. A shorter timing window is provided to perform the reduced calibration and transfer of values as defined by timing parameter $^{t}$ZQCS. A ZQCS command can effectively correct a minimum of 0.5% RON and $R_{TT}$ impedance error within 64 clock cycles, assuming the maximum sensitivities specified in DDR3L 34 Ohm Output Driver Sensitivity.

### ACTIVATE

The ACTIVATE command is used to open (or activate) a row in a particular bank for a subsequent access. The value on the BA[2:0] inputs selects the bank, and the address provided on inputs A[*n*:0] selects the row. This row remains open (or active) for accesses until a PRECHARGE command is issued to that bank.

A PRECHARGE command must be issued before opening a different row in the same bank.

### READ

The READ command is used to initiate a burst read access to an active row. The address provided on inputs A[2:0] selects the starting column address, depending on the burst length and burst type selected (see Burst Order table for additional information). The value on input A10 determines whether auto precharge is used. If auto precharge is selected,the row being accessed will be precharged at the end of the READ burst. If auto precharge is not selected, the row will remain open for subsequent accesses. The value on input A12 (if enabled in the mode register) when the READ command is issued determines whether BC4 (chop) or BL8 is used. After a READ command is issued, the READ burst may not be interrupted.

### READ Command Summary

| Function | | Symbol | CKE | | CS# | RAS# | CAS# | WE# | BA [2:0] | An | A12 | A10 | A[11, 9:0] |
|---|---|---|---|---|---|---|---|---|---|---|---|---|---|
| | | | Prev. Cycle | Next Cycle | | | | | | | | | |
| READ | BL8MRS, BC4MRS | RD | H | | L | H | L | H | BA | RFU | V | L | CA |
| | BC4OTF | RDS4 | H | | L | H | L | H | BA | RFU | L | L | CA |
| | BL8OTF | RDS8 | H | | L | H | L | H | BA | RFU | H | L | CA |
| READ with auto precharge | BL8MRS, BC4MRS | RDAP | H | | L | H | L | H | BA | RFU | V | H | CA |
| | BC4OTF | RDAPS4 | H | | L | H | L | H | BA | RFU | L | H | CA |
| | BL8OTF | RDAPS8 | H | | L | H | L | H | BA | RFU | H | H | CA |

### WRITE

The WRITE command is used to initiate a burst write access to an active row. The value on the BA[2:0] inputs selects the bank. The value on input A10 determines whether auto precharge is used. The value on input A12 (if enabled in the MR) when the WRITE command is issued determines whether BC4 (chop) or BL8 is used.

Input data appearing on the DQ is written to the memory array subject to the DM input logic level appearing coincident with the data. If a given DM signal is registered LOW, the corresponding data will be written to memory. If the DM signal is registered HIGH, the corresponding data inputs will be ignored and a WRITE will not be executed to that byte/column location.

### WRITE Command Summary

| Function | | Symbol | CKE | | CS# | RAS# | CAS# | WE# | BA [2:0] | An | A12 | A10 | A[11, 9:0] |
|---|---|---|---|---|---|---|---|---|---|---|---|---|---|
| | | | Prev. Cycle | Next Cycle | | | | | | | | | |
| WRITE | BL8MRS, BC4MRS | WR | H | | L | H | L | L | BA | RFU | V | L | CA |
| | BC4OTF | WRS4 | H | | L | H | L | L | BA | RFU | L | L | CA |
| | BL8OTF | WRS8 | H | | L | H | L | L | BA | RFU | H | L | CA |
| WRITE with auto precharge | BL8MRS, BC4MRS | WRAP | H | | L | H | L | L | BA | RFU | V | H | CA |
| | BC4OTF | WRAPS4 | H | | L | H | L | L | BA | RFU | L | H | CA |
| | BL8OTF | WRAPS8 | H | | L | H | L | L | BA | RFU | H | H | CA |

## PRECHARGE

The PRECHARGE command is used to de-activate the open row in a particular bank or in all banks. The bank(s) are available for a subsequent row access a specified time ($^{t}$RP) after the PRECHARGE command is issued, except in the case of concurrent auto precharge. A READ or WRITE command to a different bank is allowed during a concurrent auto precharge as long as it does not interrupt the data transfer in the current bank and does not violate any other timing parameters. Input A10 determines whether one or all banks are precharged. In the case where only one bank is precharged, inputs BA[2:0] select the bank; otherwise, BA[2:0] are treated as "Don't Care."

After a bank is precharged, it is in the idle state and must be activated prior to any READ or WRITE commands being issued to that bank. A PRECHARGE command is treated as a NOP if there is no open row in that bank (idle state) or if the previously open row is already in the process of precharging. However, the precharge period is determined by the last PRECHARGE command issued to the bank.

## REFRESH

The REFRESH command is used during normal operation of the DRAM and is analogous to CAS#-before-RAS# (CBR) refresh or auto refresh. This command is nonpersistent, so it must be issued each time a refresh is required. The addressing is generated by the internal refresh controller. This makes the address bits a "Don't Care" during a RE- FRESH command. The DRAM requires REFRESH cycles at an average interval of 7.8µs maximum when $T_C \leq 85°C$, 3.9µs maximum when $85°C \leq T_C \leq 95°C$. The REFRESH period begins when the REFRESH command is registered and ends $^{t}$RFC (MIN) later.

To allow for improved efficiency in scheduling and switching between tasks, some flexibility in the absolute refresh interval is provided. A maximum of eight REFRESH commands can be posted to any given DRAM, meaning that the maximum absolute interval between any REFRESH command and the next REFRESH command is nine times the maximum average interval refresh rate. Self refresh may be entered with up to eight REFRESH commands being posted. After exiting self refresh (when entered with posted REFRESH commands), additional posting of REFRESH commands is allowed to the extent that the maximum number of cumulative posted REFRESH commands (both pre-and post-self refresh) does not exceed eight REFRESH commands.

At any given time, a maximum of 16 REFRESH commands can be issued within 2 x $^{t}$REFI.

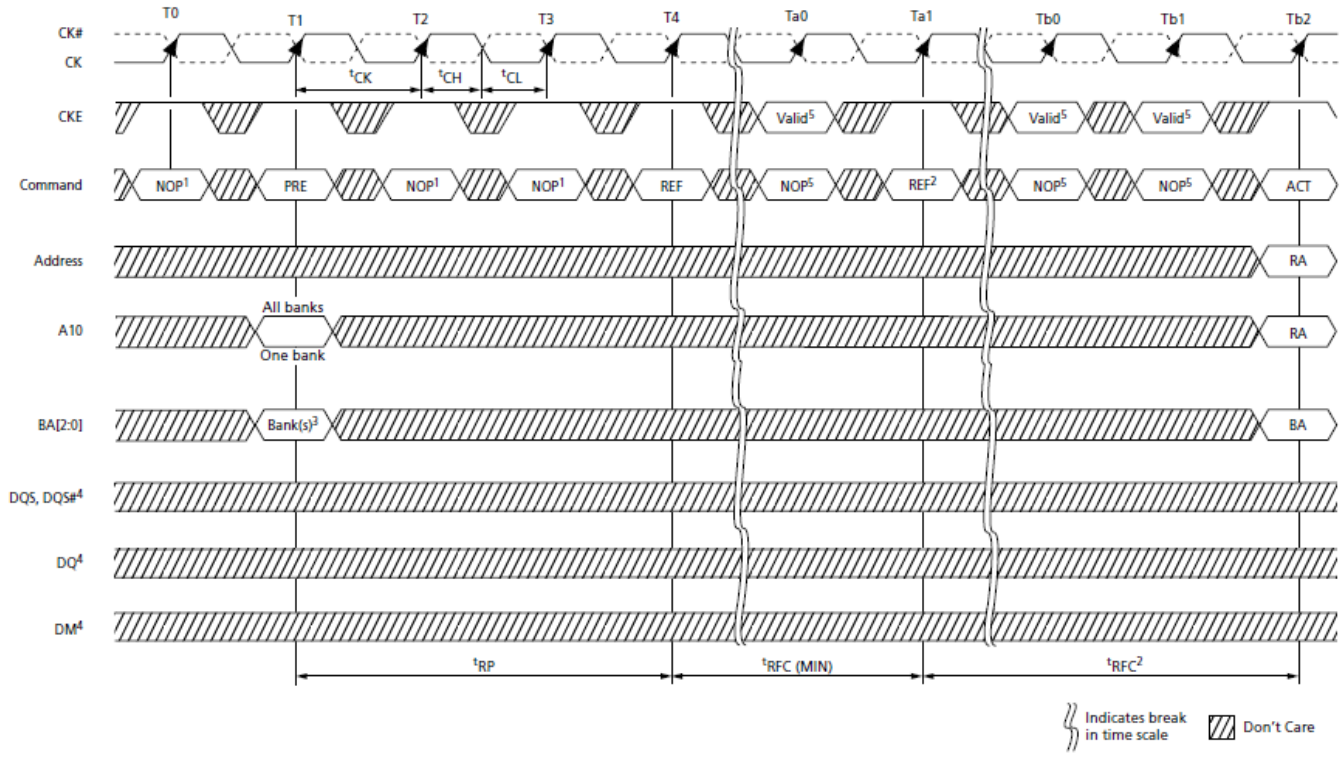


**Refresh Mode**

**Note:**

1. NOP commands are shown for ease of illustration; other valid commands may be possible at these times. CKE must be active during the PRECHARGE, ACTIVATE, and REFRESH commands, but may be inactive at other times (see Power-Down Mode).
2. The second REFRESH is not required, but two back-to-back REFRESH commands are shown.
3. "Don't Care" if A10 is HIGH at this point; however, A10 must be HIGH if more than one bank is active (must precharge all active banks).
4. For operations shown, DM, DQ, and DQS signals are all "Don't Care"/High-Z.
5. Only NOP and DES commands are allowed after a REFRESH command and until $^{t}$RFC (MIN) is satisfied.

## SELF REFRESH

The SELF REFRESH command is used to retain data in the DRAM, even if the rest of the system is powered down. When in self refresh mode, the DRAM retains data without external clocking. Self refresh mode is also a convenient method used to enable/disable the DLL as well as to change the clock frequency within the allowed synchronous operating range (see Input Clock Frequency Change). All power supply inputs (including $V_{REFCA}$ and $V_{REFDQ}$) must be maintained at valid levels upon entry/exit and during self refresh mode operation. $V_{REFDQ}$ may float or not drive $V_{DDQ}/2$ while in self refresh mode under the following conditions:

- $V_{SS} < V_{REFDQ} < V_{DD}$ is maintained
- VREFDQ is valid and stable prior to CKE going back HIGH
- The first WRITE operation may not occur earlier than 512 clocks after $V_{REFDQ}$ is valid
- All other self refresh mode exit timing requirements are met

## DLL Disable Mode

If the DLL is disabled by the mode register (MR1[0] can be switched during initialization or later), the DRAM is targeted, but not guaranteed, to operate similarly to the normal mode, with a few notable exceptions:

- The DRAM supports only one value of CAS latency (CL = 6) and one value of CAS WRITE latency (CWL = 6).
- DLL disable mode affects the read data clock-to-data strobe relationship ($^{t}$DQSCK), but not the read data-to-data strobe relationship ($^{t}$DQSQ, $^{t}$QH). Special attention is required to line up the read data with the controller time domain when the DLL is disabled.
- In normal operation (DLL on), $^{t}$DQSCK starts from the rising clock edge AL + CL cycles after the READ command. In DLL disable mode, $^{t}$DQSCK starts AL + CL - 1 cycles after the READ command. Additionally, with the DLL disabled, the value of
- $^{t}$DQSCK could be larger than $^{t}$CK.

The ODT feature (including dynamic ODT) is not supported during DLL disable mode. The ODT resistors must be disabled by continuously registering the ODT ball LOW by programming $R_{TT,nom}$ MR1[9, 6, 2] and $R_{TT(WR)}$ MR2[10, 9] to 0 while in the DLL disable mode.

Specific steps must be followed to switch between the DLL enable and DLL disable modes due to a gap in the allowed clock rates between the two modes ($^{t}$CK [AVG] MAX and $^{t}$CK [DLL_DIS] MIN, respectively). The only time the clock is allowed to cross this clock rate gap is during self refresh mode. Thus, the required procedure for switching from the DLL enable mode to the DLL disable mode is to change frequency during self refresh:

1. Starting from the idle state (all banks are precharged, all timings are fulfilled, ODT is turned off, and $R_{TT,nom}$ and $R_{TT(WR)}$ are High-Z), set MR1[0] to 1 to disable the DLL.
2. Enter self refresh mode after $^{t}$MOD has been satisfied.
3. After $^{t}$CKSRE is satisfied, change the frequency to the desired clock rate.
4. Self refresh may be exited when the clock is stable with the new frequency for $^{t}$CKSRX. After $^{t}$XS is satisfied, update the mode registers with appropriate values.
5. The DRAM will be ready for its next command in the DLL disable mode after the greater of $^{t}$MRD or $^{t}$MOD has been satisfied. A ZQCL command should be issued with appropriate timings met.

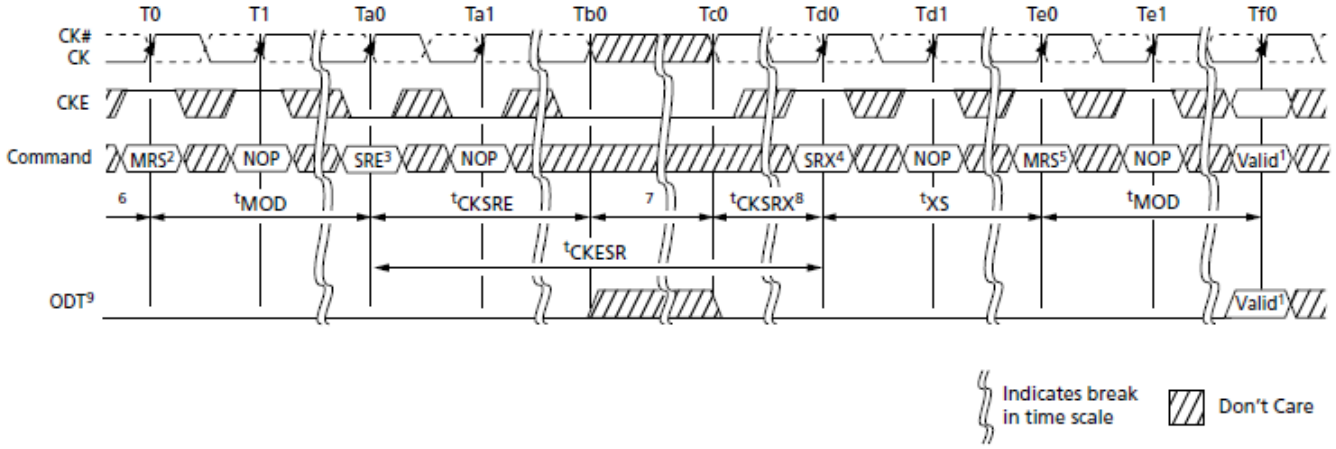


**DLL Enable Mode to DLL Disable Mode**

**Note:**

1. Any valid command.
2. Disable DLL by setting MR1[0] to 1.
3. Enter SELF REFRESH.
4. Exit SELF REFRESH.
5. Update the mode registers with the DLL disable parameters setting.
6. Starting with the idle state, RTT is in the High-Z state.
7. Change frequency.
8. Clock must be stable tCKSRX.
9. Static LOW in the case that $R_{TT,nom}$ or $R_{TT(WR)}$ is enabled; otherwise, static LOW or HIGH.

A similar procedure is required for switching from the DLL disable mode back to the DLL enable mode. This also requires changing the frequency during self refresh mode.

1. Starting from the idle state (all banks are precharged, all timings are fulfilled, ODT is turned off, and $R_{TT,nom}$ and $R_{TT(WR)}$ are High-Z), enter self refresh mode.
2. After $^{t}$CKSRE is satisfied, change the frequency to the new clock rate.
3. Self refresh may be exited when the clock is stable with the new frequency for $^{t}$CKSRX. After $^{t}$XS is satisfied, update the mode registers with the appropriate values.

At a minimum, set MR1[0] to 0 to enable the DLL. Wait $^{t}$MRD, then set MR0[8] to 1 to enable DLL RESET.

4. After another $^{t}$MRD delay is satisfied, update the remaining mode registers with the appropriate values.
5. The DRAM will be ready for its next command in the DLL enable mode after the greater of $^{t}$MRD or $^{t}$MOD has been satisfied. However, before applying any command or function requiring a locked DLL, a delay of $^{t}$DLLK after DLL RESET must be satisfied. A ZQCL command should be issued with the appropriate timings met.

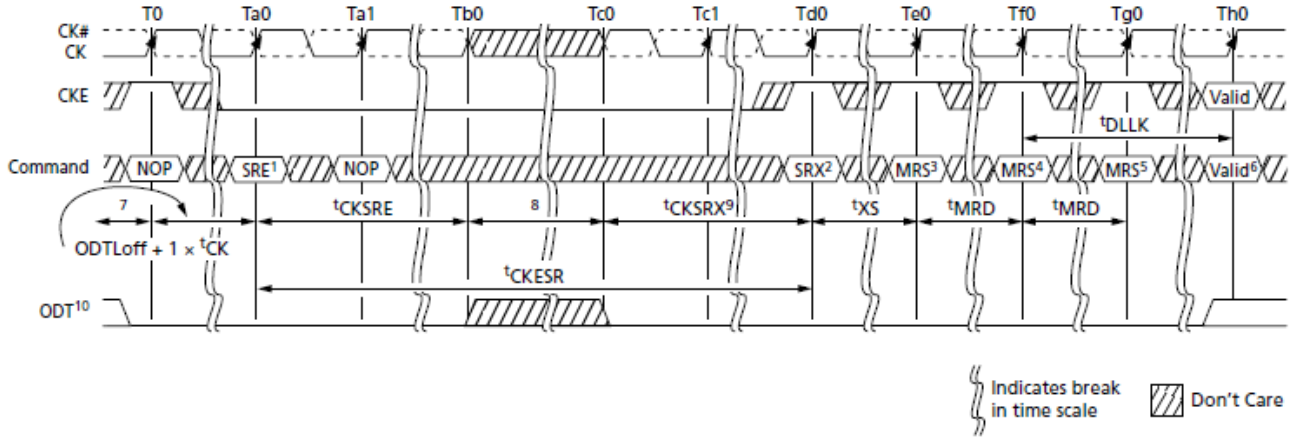


**DLL Disable Mode to DLL Enable Mode**

**Note:**

1. Enter SELF REFRESH.
2. Exit SELF REFRESH.
3. Wait $^{t}$XS, then set MR1[0] to 0 to enable DLL.
4. Wait $^{t}$MRD, then set MR0[8] to 1 to begin DLL RESET.
5. Wait $^{t}$MRD, update registers (CL, CWL, and write recovery may be necessary).
6. Wait $^{t}$MOD, any valid command.
7. Starting with the idle state.
8. Change frequency.
9. Clock must be stable at least $^{t}$CKSRX.
10. Static LOW in the case that $R_{TT,nom}$ or $R_{TT(WR)}$ is enabled; otherwise, static LOW or HIGH.

The clock frequency range for the DLL disable mode is specified by the parameter $^{t}$CK (DLL_DIS). Due to latency counter and timing restrictions, only CL = 6 and CWL = 6 are supported.

DLL disable mode will affect the read data clock to data strobe relationship ($^{t}$DQSCK) but not the data strobe to data relationship ($^{t}$DQSQ, tQH). Special attention is needed to line up read data to the controller time domain.

Compared to the DLL on mode where $^{t}$DQSCK starts from the rising clock edge AL + CL cycles after the READ command, the DLL disable mode $^{t}$DQSCK starts AL + CL - 1 cycles after the READ command.

WRITE operations function similarly between the DLL enable and DLL disable modes; however, ODT functionality is not allowed with DLL disable mode.

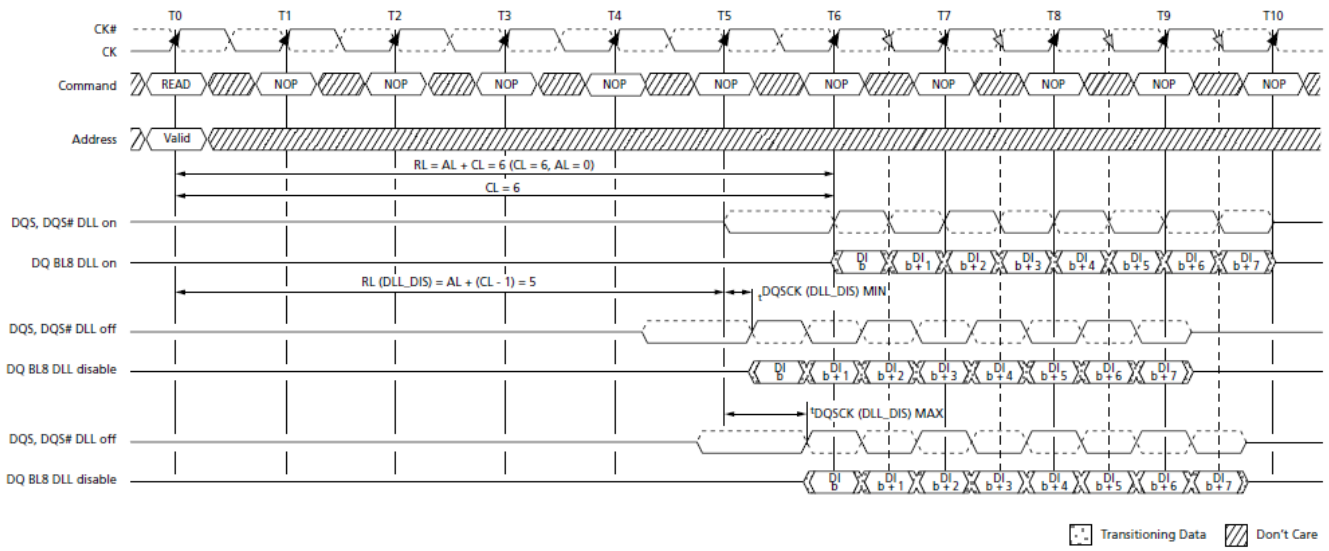


**DLL Disable $^{t}$DQSCK**

**READ Electrical Characteristics, DLL Disable Mode**

| Parameter | Symbol | Min | Max | Unit |
|---|---|---|---|---|
| Access window of DQS from CK, CK# | $^{t}$DQSCK (DLL_DIS) | 1 | 10 | ns |

## Input Clock Frequency Change

When the DDR3 SDRAM is initialized, the clock must be stable during most normal states of operation. This means that after the clock frequency has been set to the stable state, the clock period is not allowed to deviate, except for what is allowed by the clock jitter and spread spectrum clocking (SSC) specifications.

The input clock frequency can be changed from one stable clock rate to another under two conditions: self refresh mode and precharge power-down mode. It is illegal to change the clock frequency outside of those two modes. For the self refresh mode condition, when the DDR3 SDRAM has been successfully placed into self refresh mode and $^{t}$CKSRE has been satisfied, the state of the clock becomes a “Don’t Care.” When the clock becomes a “Don’t Care,” changing the clock frequency is permissible if the new clock frequency is stable prior to $^{t}$CKSRX. When entering and exiting self refresh mode for the sole purpose of changing the clock frequency, the self refresh entry and exit specifications must still be met.

The precharge power-down mode condition is when the DDR3 SDRAM is in precharge power-down mode (either fast exit mode or slow exit mode). Either ODT must be at a logic LOW or $R_{TT,nom}$ and $R_{TT(WR)}$ must be disabled via MR1 and MR2. This ensures $R_{TT,nom}$ and $R_{TT(WR)}$ are in an off state prior to entering precharge power-down mode, and CKE must be at a logic LOW. A minimum of $^{t}$CKSRE must occur after CKE goes LOW before the clock frequency can change. The DDR3 SDRAM input clock frequency is al- lowed to change only within the minimum and maximum operating frequency specified for the particular speed grade ($^{t}$CK [AVG] MIN to $^{t}$CK [AVG] MAX). During the input clock frequency change, CKE must be held at a stable LOW level. When the input clock frequency is changed, a stable clock must be provided to the DRAM $^{t}$CKSRX before precharge power-down may be exited. After precharge power-down is exited and $^{t}$XP has been satisfied, the DLL must be reset via the MRS. Depending on the new clock frequency, additional MRS commands may need to be issued. During the DLL lock time, $R_{TT,nom}$ and $R_{TT(WR)}$ must remain in an off state. After the DLL lock time, the DRAM is ready to operate with a new clock frequency.

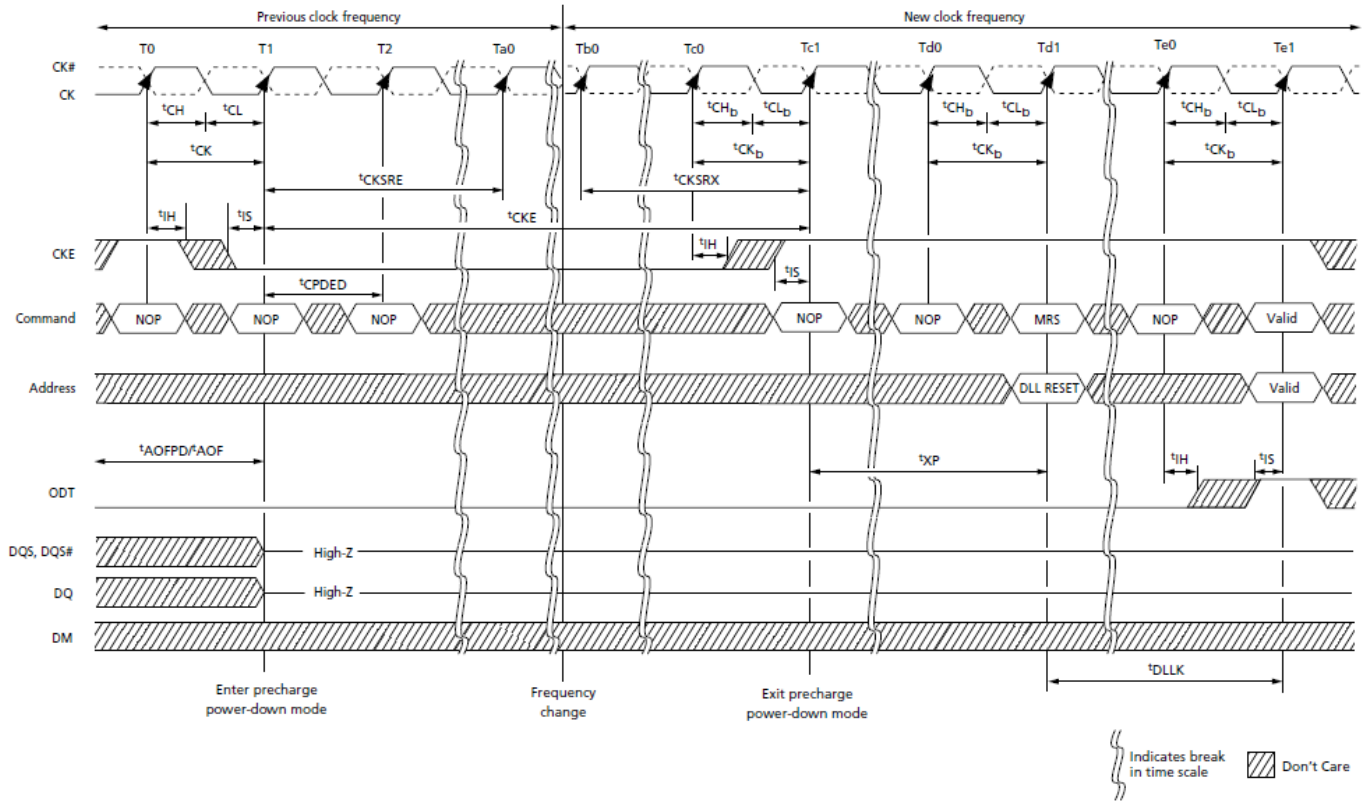


**Change Frequency During Precharge Power-Down**

**Note:**

1. Applicable for both SLOW-EXIT and FAST-EXIT precharge power-down modes.
2. $^{t}$AOFPD and $^{t}$AOF must be satisfied and outputs High-Z prior to T1 (see On-Die Termination (ODT)for exact requirements).
3. If the $R_{TT,nom}$ feature was enabled in the mode register prior to entering precharge power-down mode, the ODT signal must be continuously registered LOW, ensuring $R_{TT}$ is in an off state. If the $R_{TT,nom}$ feature was disabled in the mode register prior to entering precharge power-down mode, $R_{TT}$ will remain in the off state. The ODT signal can be registered LOW or HIGH in this case.

## Write Leveling

For better signal integrity, DDR3 SDRAM memory modules have adopted fly-by topology for the commands, addresses, control signals, and clocks. Write leveling is a scheme for the memory controller to adjust or de-skew the DQS strobe (DQS, DQS#) to CK relationship at the DRAM with a simple feedback feature provided by the DRAM. Write leveling is generally used as part of the initialization process, if required. For normal DRAM operation, this feature must be disabled. This is the only DRAM operation where the DQS functions as an input (to capture the incoming clock) and the DQ function as outputs (to report the state of the clock). Note that nonstandard ODT schemes are required.

The memory controller using the write leveling procedure must have adjustable delay settings on its DQS strobe to align the rising edge of DQS to the clock at the DRAM pins.

This is accomplished when the DRAM asynchronously feeds back the CK status via the DQ bus and samples with the rising edge of DQS. The controller repeatedly delays the DQS strobe until a CK transition from 0 to 1 is detected. The DQS delay established by this procedure helps ensure $^{t}$DQSS, $^{t}$DSS, and $^{t}$DSH specifications in systems that use fly-by topology by de-skewing the trace length mismatch. A conceptual timing of this procedure is shown in Write Leveling Concept figure.

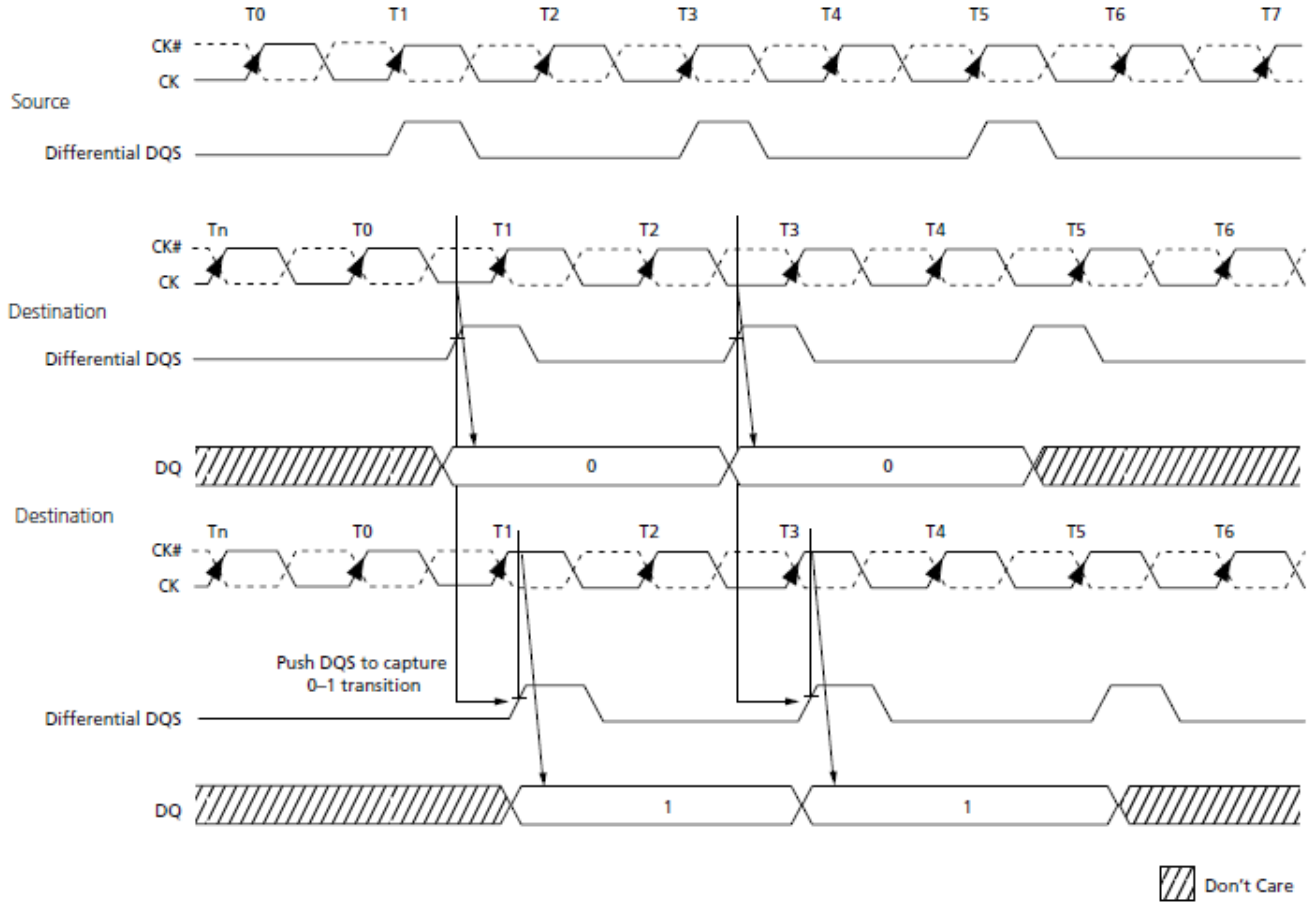


**Write Leveling Concept**

When write leveling is enabled, the rising edge of DQS samples CK, and the prime DQ outputs the sampled CK's status. The prime DQ for a x16 configuration is DQ0 for the lower byte and DQ8 for the upper byte. It outputs the status of CK sampled by LDQS and UDQS. All other DQ (DQ[7:1], DQ[15:9]) continue to drive LOW. Two prime DQ on a x16 enable each byte lane to be leveled independently.

The write leveling mode register interacts with other mode registers to correctly configure the write leveling functionality. Besides using MR1[7] to disable/enable write leveling,MR1[12] must be used to enable/disable the output buffers. The ODT value, burst length, and so forth need to be selected as well. This interaction is shown in Write Leveling Matrix table. It should also be noted that when the outputs are enabled during write leveling mode, the DQS buffers are set as inputs, and the DQ are set as outputs. Additionally, during write leveling mode, only the DQS strobe terminations are activated and deactivated via the ODT ball. The DQ remain disabled and are not affected by the ODT ball.

### Write Leveling Matrix table

Note 1 applies to the entire table

| MR1[7] | MR1[12] | MR1[2, 6, 9] | DRAM ODT Ball | DRAM $R_{TT,nom}$ | | DRAM State | Case | Notes |
|---|---|---|---|---|---|---|---|---|
| Write Leveling | Output Buffers | $R_{TT,nom}$ Value | | DQS | DQ | | | |
| Disabled | See normal operations | | | | | Write leveling not enabled | 0 | |
| Enabled (1) | Disabled (1) | n/a | Low | Off | Off | DQS not receiving: not terminated Prime DQ High-Z: not terminated Other DQ High-Z: not terminated | 1 | 2 |
| | | 20Ω, 30Ω, 40Ω,60Ω, or 120Ω | High | On | | DQS not receiving: terminated by RTT Prime DQ High-Z: not terminated Other DQ High-Z: not terminated | 2 | |
| | Enabled (0) | n/a | Low | Off | | DQS receiving: not terminated Prime DQ driving CK state: not terminated Other DQ driving LOW: not terminated | 3 | 3 |
| | | 40Ω,60Ω, or 120Ω | High | On | | DQS receiving: terminated by RTT Prime DQ driving CK state: not terminated Other DQ driving LOW: not terminated | 4 | |

**Note:**

1. Expected usage if used during write leveling: Case 1 may be used when DRAM are on a dual-rank module and on the rank not being leveled or on any rank of a module not being leveled on a multislot system. Case 2 may be used when DRAM are on any rank of a module not being leveled on a multislot system. Case 3 is generally not used. Case 4 is generally used when DRAM are on the rank that is being leveled.
2. Since the DRAM DQS is not being driven (MR1[12] = 1), DQS ignores the input strobe, and all $R_{TT,nom}$ values are allowed. This simulates a normal standby state to DQS.
3. Since the DRAM DQS is being driven (MR1[12] = 0), DQS captures the input strobe, and only some $R_{TT,nom}$ values are allowed. This simulates a normal write state to DQS.

## Write Leveling Procedure

A memory controller initiates the DRAM write leveling mode by setting MR1[7] to 1, assuming the other programable features (MR0, MR1, MR2, and MR3) are first set and the DLL is fully reset and locked. The DQ balls enter the write leveling mode going from a High-Z state to an undefined driving state, so the DQ bus should not be driven. During write leveling mode, only the NOP or DES commands are allowed. The memory controller should attempt to level only one rank at a time; thus, the outputs of other ranks should be disabled by setting MR1[12] to 1 in the other ranks. The memory controller may assert ODT after a tMOD delay, as the DRAM will be ready to process the ODT transition.

ODT should be turned on prior to DQS being driven LOW by at least ODTLon delay (WL - 2 tCK), provided it does not violate the aforementioned tMOD delay requirement.

The memory controller may drive DQS LOW and DQS# HIGH after $^{t}$WLDQSEN has been satisfied. The controller may begin to toggle DQS after tWLMRD (one DQS toggle is DQS transitioning from a LOW state to a HIGH state with DQS# transitioning from a HIGH state to a LOW state, then both transition back to their original states). At a minimum, ODTLon and tAON must be satisfied at least one clock prior to DQS toggling.

After tWLMRD and a DQS LOW preamble ($^{t}$WPRE) have been satisfied, the memory controller may provide either a single DQS toggle or multiple DQS toggles to sample CK for a given DQS-to-CK skew. Each DQS toggle must not violate $^{t}$DQSL (MIN) and $^{t}$DQSH (MIN) specifications. $^{t}$DQSL (MAX) and $^{t}$DQSH (MAX) specifications are not applicable during write leveling mode. The DQS must be able to distinguish the CK's rising edge within $^{t}$WLS and $^{t}$WLH. The prime DQ will output the CK's status asynchronously from the associated DQS rising edge CK capture within $^{t}$WLO. The remaining DQ that always drive LOW when DQS is toggling must be LOW within $^{t}$WLOE after the first $^{t}$WLO is satisfied (the prime DQ going LOW). As previously noted, DQS is an input and not an output during this process. Write Leveling Sequence figure depicts the basic timing parameters for the overall write leveling procedure.

The memory controller will most likely sample each applicable prime DQ state and determine whether to increment or decrement its DQS delay setting. After the memory controller performs enough DQS toggles to detect the CK's 0-to-1 transition, the memory controller should lock the DQS delay setting for that DRAM. After locking the DQS setting is locked, leveling for the rank will have been achieved, and the write leveling mode for the rank should be disabled or reprogrammed (if write leveling of another rank follows).

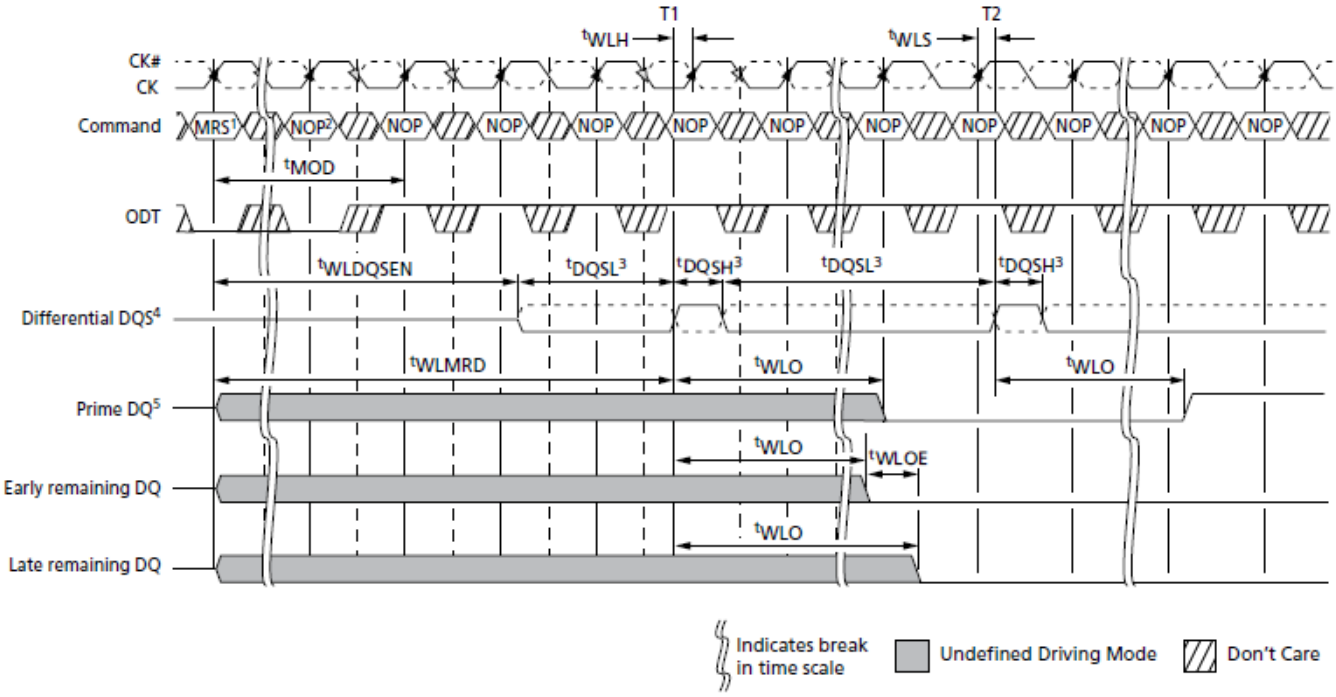


**Write Leveling Sequence**

**Note:**

1. MRS: Load MR1 to enter write leveling mode.
2. NOP: NOP or DES.
3. DQS, DQS# needs to fulfill minimum pulse width requirements $^{t}$DQSH (MIN) and $^{t}$DQSL (MIN) as defined for regular writes. The maximum pulse width is system-dependent.
4. Differential DQS is the differential data strobe (DQS, DQS#). Timing reference points are the zero crossings. The solid line represents DQS; the dotted line represents DQS#.
5. DRAM drives leveling feedback on a prime DQ (DQ0 for x8). The remaining DQ are driven LOW and remain in this state throughout the leveling procedure.

## Write Leveling Mode Exit Procedure

After the DRAM are leveled, they must exit from write leveling mode before the normal mode can be used. Write Leveling Exit Procedure figure depicts a general procedure for exiting write leveling mode. After the last rising DQS (capturing a 1 at T0), the memory controller should stop driving the DQS signals after $^{t}$WLO (MAX) delay plus enough delay to enable the memory controller to capture the applicable prime DQ state (at ~Tb0). The DQ balls become undefined when DQS no longer remains LOW, and they remain undefined until tMOD after the MRS command (at Te1).

The ODT input should be de-asserted LOW such that ODTLoff (MIN) expires after the DQS is no longer driving LOW. When ODT LOW satisfies tIS, ODT must be kept LOW (at ~Tb0) until the DRAM is ready for either another rank to be leveled or until the normal mode can be used. After DQS termination is switched off, write level mode should be disabled via the MRS command (at Tc2). After $^{t}$MOD is satisfied (at Te1), any valid command may be registered by the DRAM. Some MRS commands may be issued after tMRD (at Td1).

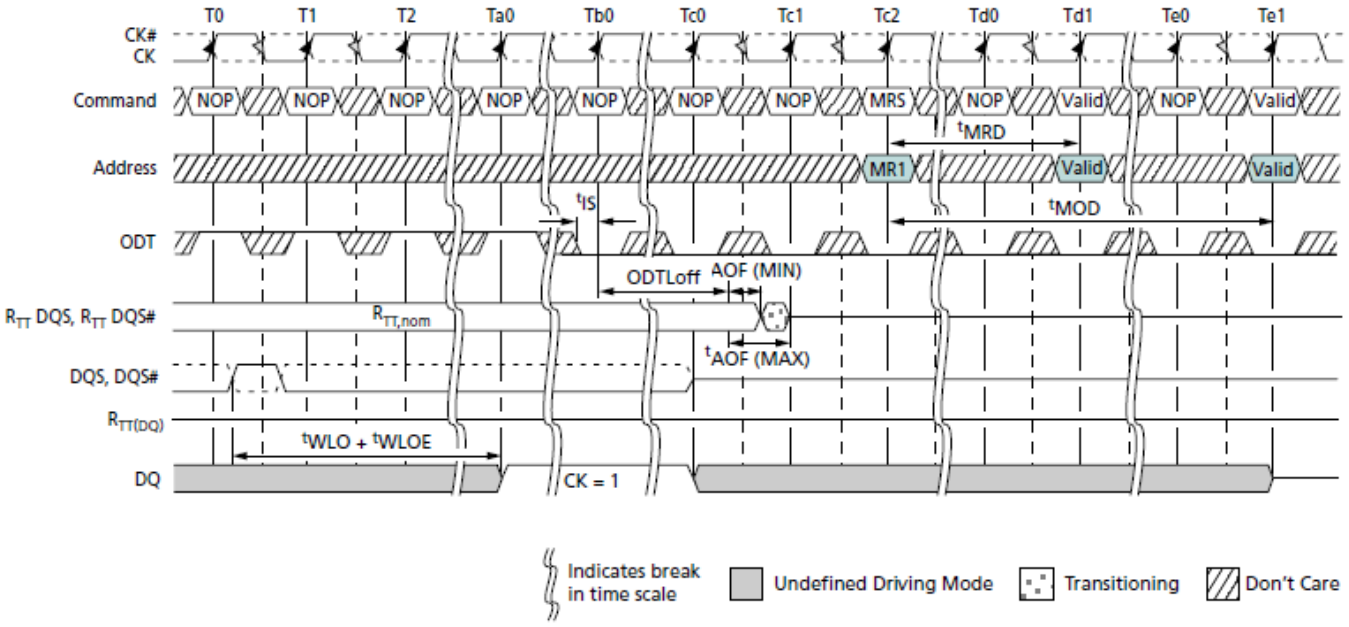


Note: 1. The DQ result, = 1, between Ta0 and Tc0, is a result of the DQS, DQS# signals capturing CK HIGH just after the T0 state.

**Write Leveling Exit Procedure**

## Initialization

The following sequence is required for power-up and initialization, as shown in Initialization Sequence figure:

1. Apply power. RESET# is recommended to be below 0.2 × $V_{DDQ}$ during power ramp to ensure the outputs remain disabled (High-Z) and ODT off (RTT is also High-Z).

   All other inputs, including ODT, may be undefined.

   During power-up, either of the following conditions may exist and must be met:

   - Condition A:
   - – $V_{DD}$ and $V_{DDQ}$ are driven from a single-power converter output and are ramped with a maximum delta voltage between them of ΔV ≤ 300mV. Slope reversal of any power supply signal is allowed. The voltage levels on all balls other than $V_{DD}$, $V_{DDQ}$, $V_{SS}$, $V_{SSQ}$ must be less than or equal to $V_{DDQ}$ and $V_{DD}$ on one side, and must be greater than or equal to $V_{SSQ}$ and $V_{SS}$ on the other side.
   - – Both $V_{DD}$ and $V_{DDQ}$ power supplies ramp to $V_{DD,min}$ and $V_{DDQ,min}$ within $^{t}V_{DDPR}$ = 200ms.
   - – $V_{REFDQ}$ tracks $V_{DD}$ × 0.5, $V_{REFCA}$ tracks $V_{DD}$ × 0.5.
   - – $V_{TT}$ is limited to 0.95V when the power ramp is complete and is not applied directly to the device; however, $^{t}$VTD should be greater than or equal to 0 to avoid device latchup.
   - Condition B:
   - – $V_{DD}$ may be applied before or at the same time as $V_{DDQ}$.
   - – $V_{DDQ}$ may be applied before or at the same time as $V_{TT}$, $V_{REFDQ}$, and $V_{REFCA}$.
   - – No slope reversals are allowed in the power supply ramp for this condition.
2. Until stable power, maintain RESET# LOW to ensure the outputs remain disabled (High-Z). After the power is stable, RESET# must be LOW for at least 200µs to begin the initialization process. ODT will remain in the High-Z state while RESET# is LOW and until CKE is registered HIGH.
3. CKE must be LOW 10ns prior to RESET# transitioning HIGH.
4. After RESET# transitions HIGH, wait 500µs (minus one clock) with CKE LOW.
5. After the CKE LOW time, CKE may be brought HIGH (synchronously) and only NOP or DES commands may be issued. The clock must be present and valid for at least 10ns (and a minimum of five clocks) and ODT must be driven LOW at least tIS prior to CKE being registered HIGH. When CKE is registered HIGH, it must be continuously registered HIGH until the full initialization process is complete.
6. After CKE is registered HIGH and after $^{t}$XPR has been satisfied, MRS commands may be issued. Issue an MRS (LOAD MODE) command to MR2 with the applicable settings (provide LOW to BA2 and BA0 and HIGH to BA1).
7. Issue an MRS command to MR3 with the applicable settings.
8. Issue an MRS command to MR1 with the applicable settings, including enabling the DLL and configuring ODT.
9. Issue an MRS command to MR0 with the applicable settings, including a DLL RESET command. $^{t}$DLLK (512) cycles of clock input are required to lock the DLL.
10. Issue a ZQCL command to calibrate RTT and RON values for the process voltage temperature (PVT). Prior to normal operation, $^{t}$ZQinit must be satisfied.
11. When $^{t}$DLLK and tZQinit have been satisfied, the DDR3 SDRAM will be ready for normal operation.

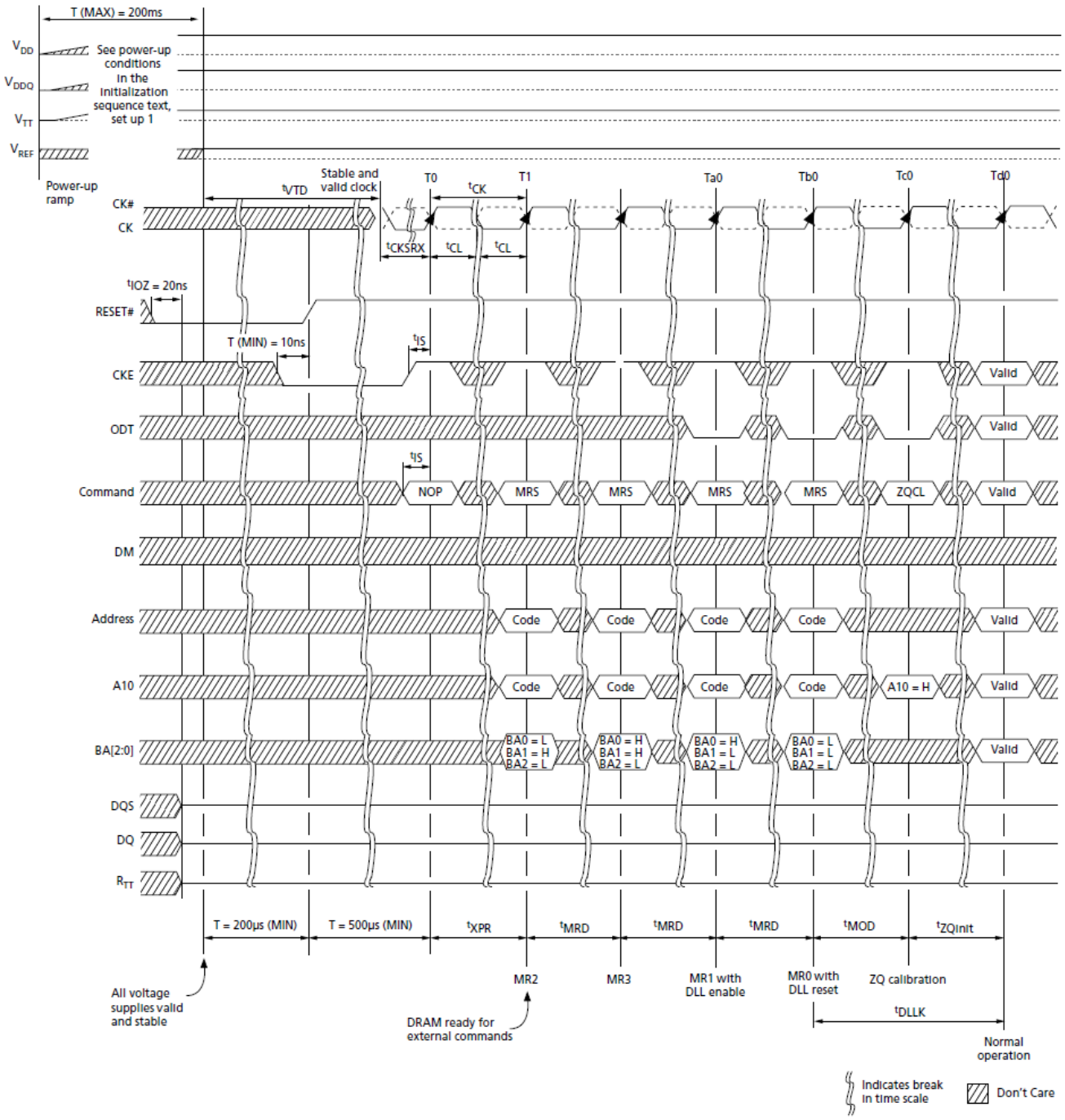


**Initialization Sequence**

## Voltage Initialization/Change

If the SDRAM is powered up and initialized for the 1.35V operating voltage range, voltage can be increased to the 1.5V operating range provided the following conditions are met (See $V_{DD}$ Voltage Switching figure):

• Just prior to increasing the 1.35V operating voltages, no further commands are issued,other than NOPs or COMMAND INHIBITs, and all banks are in the precharge state.

• The 1.5V operating voltages are stable prior to issuing new commands, other than NOPs or COMMAND INHIBITs.

• The DLL is reset and relocked after the 1.5V operating voltages are stable and prior to any READ command.

• The ZQ calibration is performed. $^{t}$ZQinit must be satisfied after the 1.5V operating voltages are stable and prior to any READ command.

If the SDRAM is powered up and initialized for the 1.5V operating voltage range, voltage can be reduced to the 1.35V operation range provided the following conditions are met (See $V_{DD}$ Voltage Switching figure) :

• Just prior to reducing the 1.5V operating voltages, no further commands are issued,other than NOPs or COMMAND INHIBITs, and all banks are in the precharge state.

• The 1.35V operating voltages are stable prior to issuing new commands, other than NOPs or COMMAND INHIBITs.

• The DLL is reset and relocked after the 1.35V operating voltages are stable and prior to any READ command.

• The ZQ calibration is performed. $^{t}$ZQinit must be satisfied after the 1.35V operating voltages are stable and prior to any READ command.

## $V_{DD}$ Voltage Switching

After the DDR3L DRAM is powered up and initialized, the power supply can be altered between the DDR3L and DDR3 levels, provided the sequence in $V_{DD}$ Voltage Switching figure is maintained.

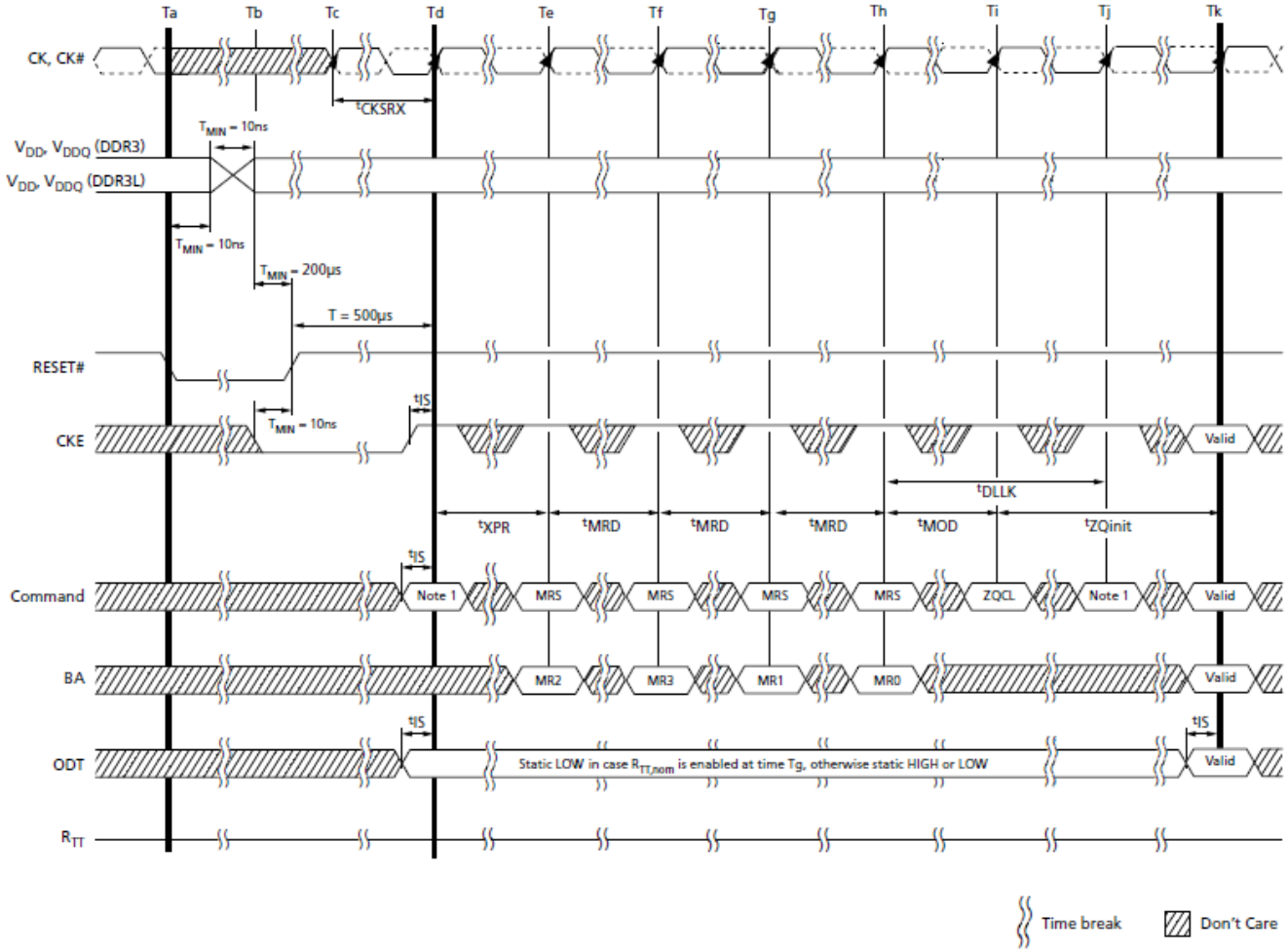


Note: 1. From time point Td until Tk, NOP or DES commands must be applied between MRS and ZQCL commands.

**VDD Voltage Switching**

## Mode Registers

Mode registers (MR0–MR3) are used to define various modes of programmable operations of the DDR3 SDRAM. A mode register is programmed via the mode register set (MRS) command during initialization, and it retains the stored information (except for MR0[8], which is self-clearing) until it is reprogrammed, RESET# goes LOW, the device loses power.

Contents of a mode register can be altered by re-executing the MRS command. Even if the user wants to modify only a subset of the mode register's variables, all variables must be programmed when the MRS command is issued. Reprogramming the mode register will not alter the contents of the memory array, provided it is performed correctly.

The MRS command can only be issued (or re-issued) when all banks are idle and in the precharged state ($^{t}$RP is satisfied and no data bursts are in progress). After an MRS command has been issued, two parameters must be satisfied: $^{t}$MRD and $^{t}$MOD. The controller must wait tMRD before initiating any subsequent MRS commands.

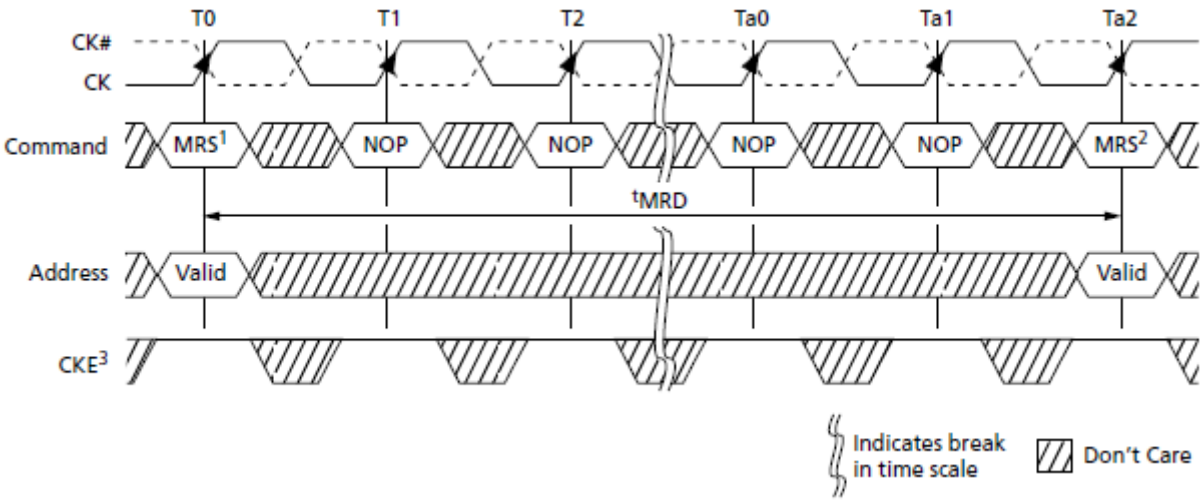


**MRS to MRS Command Timing ($^{t}$MRD)**

**Note:**

1. Prior to issuing the MRS command, all banks must be idle and precharged, $^{t}$RP (MIN) must be satisfied, and no data bursts can be in progress.
2. $^{t}$MRD specifies the MRS to MRS command minimum cycle time.
3. CKE must be registered HIGH from the MRS command until $^{t}$MRSPDEN (MIN) (see Power- Down Mode).
4. For a CAS latency change, $^{t}$XPDLL timing must be met before any non-MRS command.

The controller must also wait $^{t}$MOD before initiating any non-MRS commands (excluding NOP and DES). The DRAM requires $^{t}$MOD in order to update the requested features, with the exception of DLL RESET, which requires additional time. Until $^{t}$MOD has been satisfied, the updated features are to be assumed unavailable.

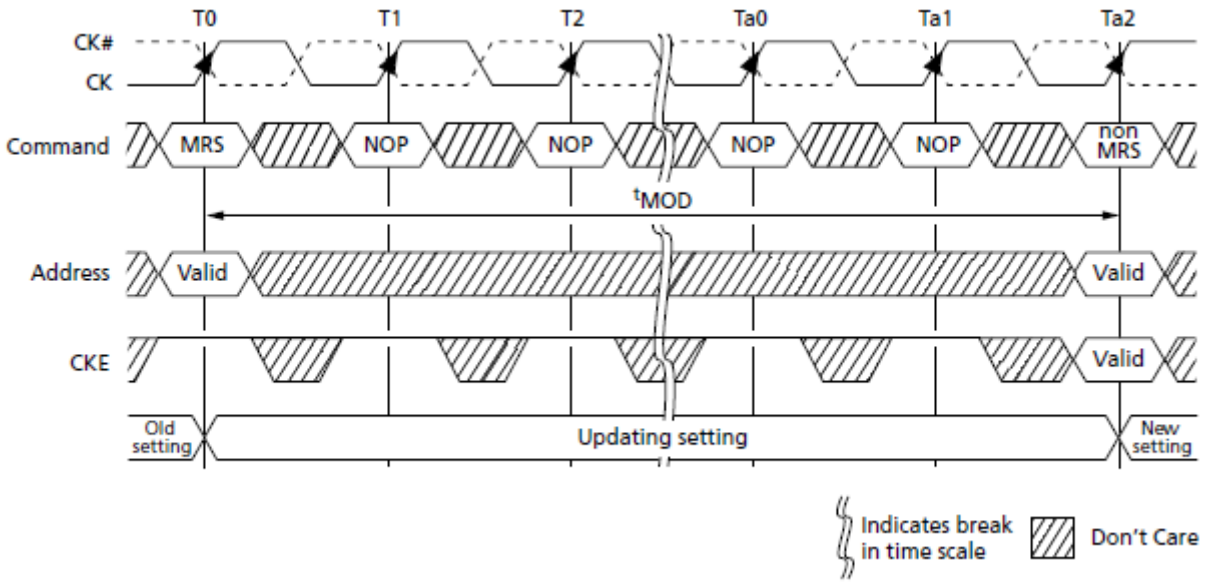


**MRS to nonMRS Command Timing ($^{t}$MOD)**

**Note:**

1. Prior to issuing the MRS command, all banks must be idle (they must be precharged, $^{t}$RP must be satisfied, and no data bursts can be in progress).
2. Prior to Ta2 when $^{t}$MOD (MIN) is being satisfied, no commands (except NOP/DES) may be issued.
3. If $R_{TT}$ was previously enabled, ODT must be registered LOW at T0 so that ODTL is satisfied prior to Ta1. ODT must also be registered LOW at each rising CK edge from T0 until tMODmin is satisfied at Ta2.
4. CKE must be registered HIGH from the MRS command until $^{t}$MRSPDEN (MIN), at which time power-down may occur (see Power-Down Mode).

## Mode Register 0 (MR0)

The base register, mode register 0 (MR0), is used to define various DDR3 SDRAM modes of operation. These definitions include the selection of a burst length, burst type, CAS latency, operating mode, DLL RESET, write recovery, and precharge power-down mode (see Mode Register 0 (MR0) Definitions figure).

## Burst Length

Burst length is defined by MR0[1:0]. Read and write accesses to the DDR3 SDRAM are burst-oriented, with the burst length being programmable to 4 (chop) mode, 8 (fixed) mode, or selectable using A12 during a READ/WRITE command (on-the-fly). The burst length determines the maximum number of column locations that can be accessed for a given READ or WRITE command. When MR0[1:0] is set to 01 during a READ/WRITE command, if A12 = 0, then BC4 mode is selected. If A12 = 1, then BL8 mode is selected.

Specific timing diagrams, and turnaround between READ/WRITE, are shown in the READ/WRITE sections of this document.

When a READ or WRITE command is issued, a block of columns equal to the burst length is effectively selected. All accesses for that burst take place within this block,meaning that the burst will wrap within the block if a boundary is reached. The block is uniquely selected by A[i:2] when the burst length is set to 4 and by A[i:3] when the burst length is set to 8, where Ai is the most significant column address bit for a given configuration.

The remaining (least significant) address bit(s) is (are) used to select the start ing location within the block. The programmed burst length applies to both READ and WRITE bursts.

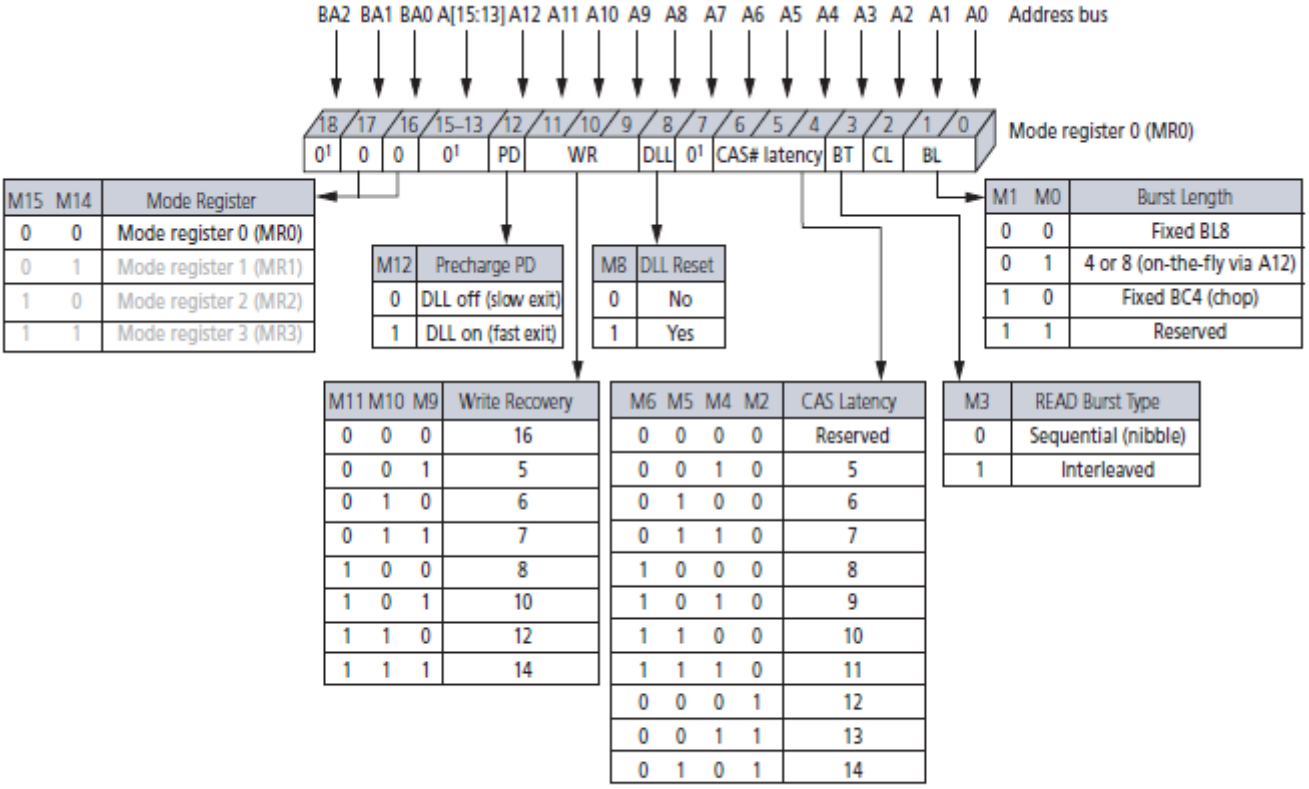


Note: 1. MR0[18, 15:13, 7] are reserved for future use and must be programmed to 0.

**Mode Register 0 (MR0) Definitions**

## Burst Type

Accesses within a given burst can be programmed to either a sequential or an interleaved order. The burst type is selected via MR0[3] (see Mode Register 0 (MR0) Definitions figure). The ordering of accesses within a burst is determined by the burst length, the burst type, and the starting column address. DDR3 only supports 4-bit burst chop and 8-bit burst access modes. Full interleave address ordering is supported for READs, while WRITEs are restricted to nibble (BC4) or word (BL8) boundaries.

### Burst Order

| Burst Length | READ/ WRITE | Starting Column Address (A[2, 1, 0]) | Burst Type = Sequential (Decimal) | Burst Type = Interleaved (Decimal) | Notes |
|---|---|---|---|---|---|
| 4 (chop) | READ | 0 0 0 | 0, 1, 2, 3, Z, Z, Z, Z | 0, 1, 2, 3, Z, Z, Z, Z | 1, 2 |
| | | 0 0 1 | 1, 2, 3, 0, Z, Z, Z, Z | 1, 0, 3, 2, Z, Z, Z, Z | 1, 2 |
| | | 0 1 0 | 2, 3, 0, 1, Z, Z, Z, Z | 2, 3, 0, 1, Z, Z, Z, Z | 1, 2 |
| | | 0 1 1 | 3, 0, 1, 2, Z, Z, Z, Z | 3, 2, 1, 0, Z, Z, Z, Z | 1, 2 |
| | | 1 0 0 | 4, 5, 6, 7, Z, Z, Z, Z | 4, 5, 6, 7, Z, Z, Z, Z | 1, 2 |
| | | 1 0 1 | 5, 6, 7, 4, Z, Z, Z, Z | 5, 4, 7, 6, Z, Z, Z, Z | 1, 2 |
| | | 1 1 0 | 6, 7, 4, 5, Z, Z, Z, Z | 6, 7, 4, 5, Z, Z, Z, Z | 1, 2 |
| | | 1 1 1 | 7, 4, 5, 6, Z, Z, Z, Z | 7, 6, 5, 4, Z, Z, Z, Z | 1, 2 |
| | WRITE | 0 V V | 0, 1, 2, 3, X, X, X, X | 0, 1, 2, 3, X, X, X, X | 1, 3, 4 |
| | | 1 V V | 4, 5, 6, 7, X, X, X, X | 4, 5, 6, 7, X, X, X, X | 1, 3, 4 |
| 8 (fixed) | READ | 0 0 0 | 0, 1, 2, 3, 4, 5, 6, 7 | 0, 1, 2, 3, 4, 5, 6, 7 | 1 |
| | | 0 0 1 | 1, 2, 3, 0, 5, 6, 7, 4 | 1, 0, 3, 2, 5, 4, 7, 6 | 1 |
| | | 0 1 0 | 2, 3, 0, 1, 6, 7, 4, 5 | 2, 3, 0, 1, 6, 7, 4, 5 | 1 |
| | | 0 1 1 | 3, 0, 1, 2, 7, 4, 5, 6 | 3, 2, 1, 0, 7, 6, 5, 4 | 1 |
| | | 1 0 0 | 4, 5, 6, 7, 0, 1, 2, 3 | 4, 5, 6, 7, 0, 1, 2, 3 | 1 |
| | | 1 0 1 | 5, 6, 7, 4, 1, 2, 3, 0 | 5, 4, 7, 6, 1, 0, 3, 2 | 1 |
| | | 1 1 0 | 6, 7, 4, 5, 2, 3, 0, 1 | 6, 7, 4, 5, 2, 3, 0, 1 | 1 |
| | | 1 1 1 | 7, 4, 5, 6, 3, 0, 1, 2 | 7, 6, 5, 4, 3, 2, 1, 0 | 1 |
| | WRITE | V V V | 0, 1, 2, 3, 4, 5, 6, 7 | 0, 1, 2, 3, 4, 5, 6, 7 | 1, 3 |

**Note:**

1. Internal READ and WRITE operations start at the same point in time for BC4 as they do for BL8.
2. Z = Data and strobe output drivers are in tri-state.
3. V = A valid logic level (0 or 1), but the respective input buffer ignores level-on input pins.
4. X = “Don’t Care.”

## DLL RESET

DLL RESET is defined by MR0[8] (see Mode Register 0 (MR0) Definitions figure). Programming MR0[8] to 1 activates the DLL RESET function. MR0[8] is self-clearing, meaning it returns to a value of 0 after the DLL RESET function has been initiated.

Anytime the DLL RESET function is initiated, CKE must be HIGH and the clock held stable for 512 ($^{t}$DLLK) clock cycles before a READ command can be issued. This is to allow time for the internal clock to be synchronized with the external clock. Failing to wait for synchronization can result in invalid output timing specifications, such as $^{t}$DQSCK timings.

## Write Recovery

WRITE recovery time is defined by MR0[11:9] (see Mode Register 0 (MR0) Definitions figure). Write recovery values of 5, 6, 7, 8, 10, or 12 can be used by programming MR0[11:9]. The user is required to program the correct value of write recovery, which is calculated by dividing $^{t}$WR (ns) by $^{t}$CK (ns) and rounding up a noninteger value to the next integer: WR (cycles) = roundup ($^{t}$WR (ns)/$^{t}$CK (ns)).

## Precharge Power-Down (Precharge PD)

The precharge power-down (precharge PD) bit applies only when precharge powerdown mode is being used. When MR0[12] is set to 0, the DLL is off during precharge power-down, providing a lower standby current mode; however, $^{t}$XPDLL must be satisfied when exiting. When MR0[12] is set to 1, the DLL continues to run during precharge power-down mode to enable a faster exit of precharge power-down mode; however, tXP must be satisfied when exiting (see Power-Down Mode).

## CAS Latency (CL)

CAS latency (CL) is defined by MR0[6:4], as shown in Mode Register 0 (MR0) Definitions figure). CAS latency is the delay, in clock cycles, between the internal READ command and the availability of the first bit of output data. CL can be set to 5 through 14. DDR3 SDRAM do not support half-clock latencies.

Examples of CL = 6 and CL = 8 are shown below. If an internal READ command is registered at clock edge n, and the CAS latency is m clocks, the data will be available nominally coincident with clock edge n + m. See Speed Bin Tables for the CLs supported at various operating frequencies.

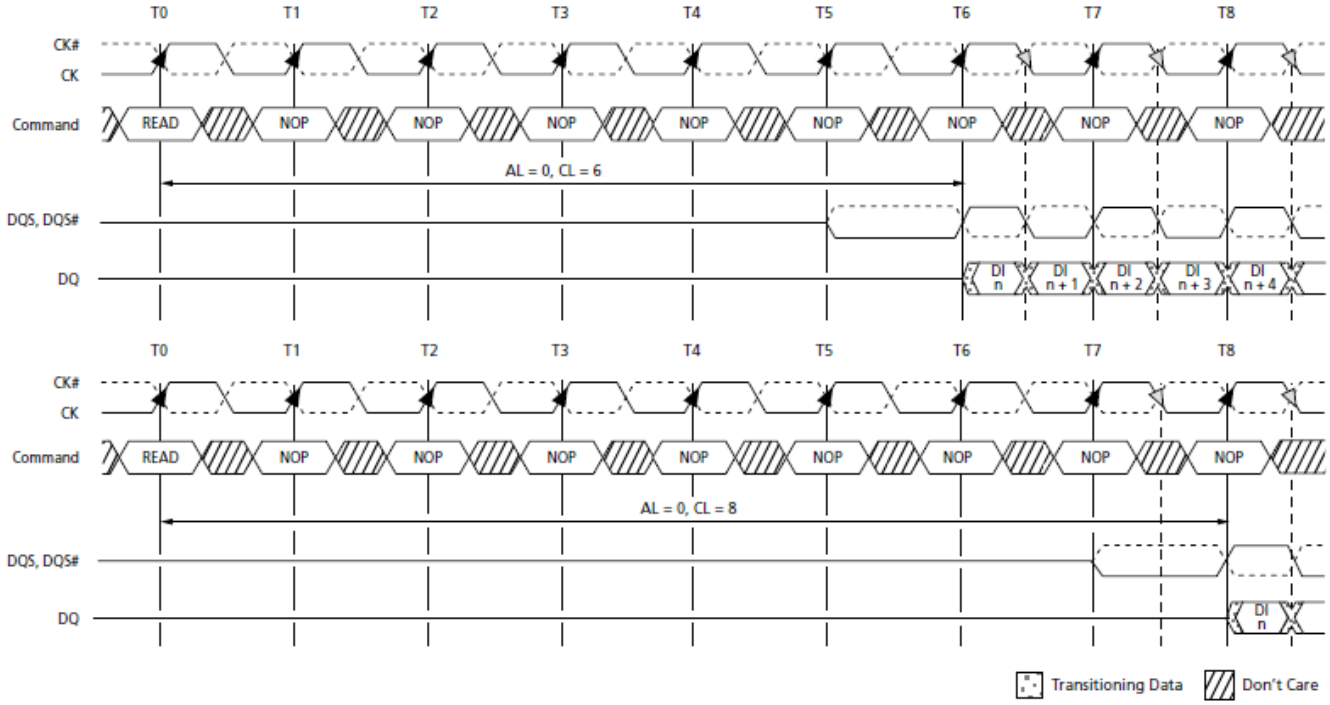


Notes: 1. For illustration purposes, only CL = 6 and CL = 8 are shown. Other CL values are possible.
2. Shown with nominal $^{t}$DQSCK and nominal $^{t}$DSDQ.

**READ Latency**

## Mode Register 1 (MR1)

The mode register 1 (MR1) controls additional functions and features not available in the other mode registers: Q OFF (OUTPUT DISABLE), DLL ENABLE/DLL DISABLE, $R_{TT,nom}$ value (ODT), WRITE LEVELING, POSTED CAS ADDITIVE latency, and OUTPUT DRIVE STRENGTH. These functions are controlled via the bits shown in Mode Register 1 (MR1) Definition figure. The MR1 register is programmed via the MRS command and retains the stored information until it is reprogrammed, until RESET# goes LOW, or until the device loses power. Reprogramming the MR1 register will not alter the contents of the memory array, provided it is performed correctly.

The MR1 register must be loaded when all banks are idle and no bursts are in progress.
The controller must satisfy the specified timing parameters $^{t}$MRD and $^{t}$MOD before initiating a subsequent operation.

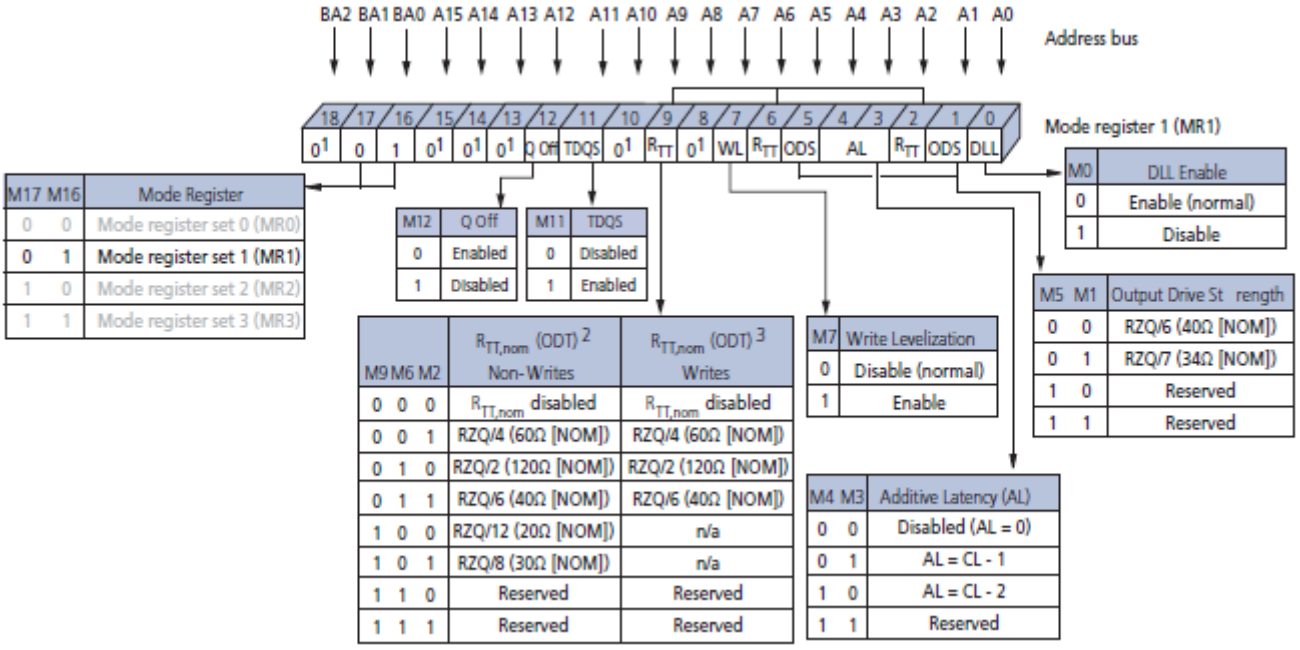


**Mode Register 1 (MR1) Definition**

**Note:**

1. MR1[18, 15:13, 10, 8] are reserved for future use and must be programmed to 0.
2. During write leveling, if MR1[7] and MR1[12] are 1, then all $R_{TT,nom}$ values are available for use.
3. During write leveling, if MR1[7] is a 1, but MR1[12] is a 0, then only $R_{TT,nom}$ write values are available for use.

## DLL Enable/DLL Disable

The DLL may be enabled or disabled by programming MR1[0] during the LOAD MODE command, as shown in Mode Register 1 (MR1) Definition figure. The DLL must be enabled for normal operation.

DLL enable is required during power-up initialization and upon returning to normal operation after having disabled the DLL for the purpose of debugging or evaluation.

Enabling the DLL should always be followed by resetting the DLL using the appropriate LOAD MODE command.

If the DLL is enabled prior to entering self refresh mode, the DLL is automatically disabled when entering SELF REFRESH operation and is automatically reenabled and reset upon exit of SELF REFRESH operation. If the DLL is disabled prior to entering self re fresh mode, the DLL remains disabled even upon exit of SELF REFRESH operation until it is reenabled and reset.

The DRAM is not tested to check—nor does warrant compliance with—normal mode timings or functionality when the DLL is disabled. An attempt has been made to have the DRAM operate in the normal mode where reasonably possible when the DLL has been disabled; however, by industry standard, a few known exceptions are defined:

- ODT is not allowed to be used
- The output data is no longer edge-aligned to the clock
- CL and CWL can only be six clocks

When the DLL is disabled, timing and functionality can vary from the normal operation specifications when the DLL is enabled (see DLL Disable Mode). Disabling the DLL also implies the need to change the clock frequency (see Input Clock Frequency Change).

## Output Drive Strength

The DDR3 SDRAM uses a programmable impedance output buffer. The drive strength mode register setting is defined by MR1[5, 1]. RZQ/7 (34Ω [NOM]) is the primary output driver impedance setting for DDR3 SDRAM devices. To calibrate the output driver impedance,an external precision resistor (RZQ) is connected between the ZQ ball and $V_{SSQ}$. The value of the resistor must be 240Ω ±1%.

The output impedance is set during initialization. Additional impedance calibration updates do not affect device operation, and all data sheet timings and current specifications are met during an update.

To meet the 34Ω specification, the output drive strength must be set to 34Ω during initialization.

To obtain a calibrated output driver impedance after power-up, the DDR3 SDRAM needs a calibration command that is part of the initialization and reset procedure.

## OUTPUT ENABLE/DISABLE

The OUTPUT ENABLE function is defined by MR1[12], as shown in Mode Register 1 (MR1) Definition figure. When enabled (MR1[12] = 0), all outputs (DQ, DQS, DQS#) function when in the normal mode of operation. When disabled (MR1[12] = 1), all DDR3 SDRAM outputs (DQ and DQS, DQS#) are tristated. The output disable feature is intended to be used during IDD characterization of the READ current and during $^{t}$DQSS margining (write leveling) only.

## On-Die Termination

ODT resistance $R_{TT,nom}$ is defined by MR1[9, 6, 2] (see Mode Register 1 (MR1) Definition figure). The $R_{TT}$ termination value applies to the DQ, DM, DQS and DQS balls. DDR3 supports multiple $R_{TT}$ termination values based on RZQ/n where n can be 2, 4, 6, 8, or 12 and RZQ is 240Ω.

Unlike DDR2, DDR3 ODT must be turned off prior to reading data out and must remain off during a READ burst. $R_{TT,nom}$ termination is allowed any time after the DRAM is initialized, calibrated, and not performing read access, or when it is not in self refresh mode. Additionally, write accesses with dynamic ODT enabled ($R_{TT(WR)}$) temporarily replaces $R_{TT,nom}$ with $R_{TT(WR)}$.

The actual effective termination, $R_{TT(EFF)}$, may be different from the RTT targeted due to nonlinearity of the termination. For $R_{TT(EFF)}$ values and calculations (see On-Die Termination (ODT)).

The ODT feature is designed to improve signal integrity of the memory channel by enabling the DDR3 SDRAM controller to independently turn on/off ODT for any or all devices.

The ODT input control pin is used to determine when $R_{TT}$ is turned on (ODTL on) and off (ODTL off), assuming ODT has been enabled via MR1[9, 6, 2].Timings for ODT are detailed in On-Die Termination (ODT).

## WRITE LEVELING

The WRITE LEVELING function is enabled by MR1[7], as shown in Mode Register 1 (MR1) Definition figure.

Write leveling is used (during initialization) to deskew the DQS strobe to clock offset as a result of fly-by topology designs. For better signal integrity, DDR3 SDRAM memory modules adopted fly-by topology for the commands, addresses, control signals, and clocks.

The fly-by topology benefits from a reduced number of stubs and their lengths. However,fly-by topology induces flight time skews between the clock and DQS strobe (and DQ) at each DRAM on the DIMM. Controllers will have a difficult time maintaining $^{t}$DQSS, $^{t}$DSS, and $^{t}$DSH specifications without supporting write leveling in systems which use fly-by topology-based modules. Write leveling timing and detailed operation information is provided in Write Leveling.

## POSTED CAS ADDITIVE Latency

POSTED CAS ADDITIVE latency (AL) is supported to make the command and data bus efficient for sustainable bandwidths in DDR3 SDRAM. MR1[4, 3] define the value of AL,as shown in READ Latency (AL = 5, CL = 6) figure. MR1[4, 3] enable the user to program the DDR3 SDRAM with AL = 0, CL - 1, or CL - 2.

With this feature, the DDR3 SDRAM enables a READ or WRITE command to be issued after the ACTIVATE command for that bank prior to tRCD (MIN). The only restriction is ACTIVATE to READ or WRITE + AL ≥ $^{t}$RCD (MIN) must be satisfied. Assuming $^{t}$RCD (MIN) = CL, a typical application using this feature sets AL = CL - 1tCK = $^{t}$RCD (MIN) – 1 $^{t}$CK. The READ or WRITE command is held for the time of the AL before it is released internally to the DDR3 SDRAM device. READ latency (RL) is controlled by the sum of the AL and CAS latency (CL), RL = AL + CL. WRITE latency (WL) is the sum of CAS WRITE latency and AL, WL = AL + CWL (see Mode Register 2 (MR2)). Examples of READ and WRITE latencies are shown in READ Latency (AL = 5, CL = 6) figure and Simplified State Diagram figure.

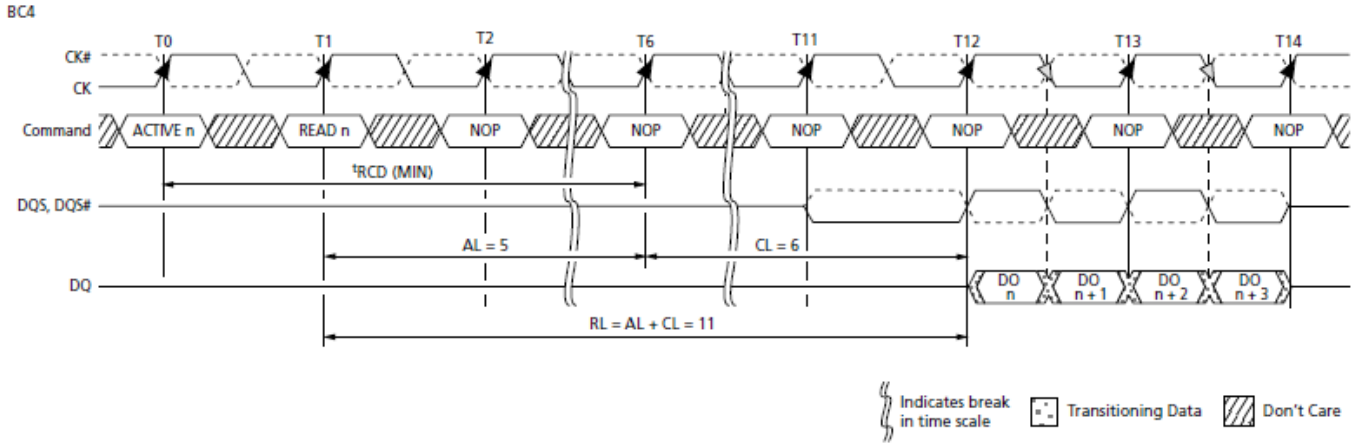


**READ Latency (AL = 5, CL = 6)**

## Mode Register 2 (MR2)

The mode register 2 (MR2) controls additional functions and features not available in the other mode registers. These additional functions are CAS WRITE latency (CWL), AUTO SELF REFRESH (ASR), SELF REFRESH TEMPERATURE (SRT), and DYNAMIC ODT ($R_{TT(WR)}$). These functions are controlled via the bits shown in Mode Register 2 (MR2) Definition figure. The MR2 is programmed via the MRS command and will retain the stored information until it is programmed again or until the device loses power. Reprogramming the MR2 register will not alter the contents of the memory array, provided it is performed correctly. The MR2 register must be loaded when all banks are idle and no data bursts are in progress, and the controller must wait the specified time tMRD and tMOD before initiating a subsequent operation.

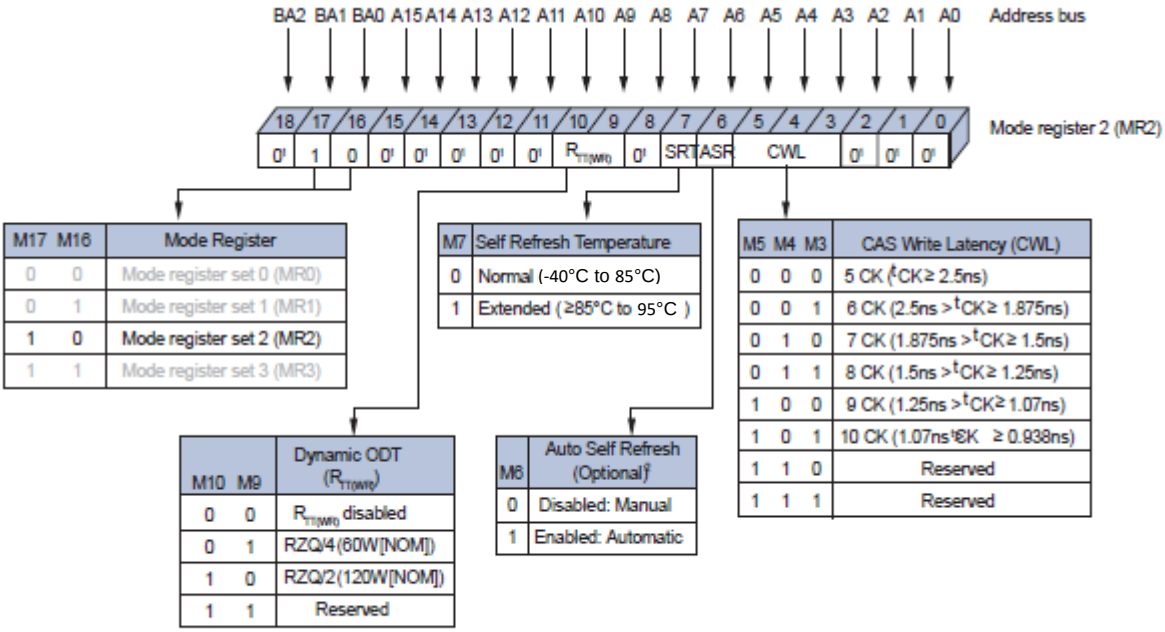


Note: 1. MR2[18, 15:11, 8, and 2:0] are reserved for future use and must all be programmed to 0.

**Mode Register 2 (MR2) Definition**

## CAS Write Latency (CWL)

CWL is defined by MR2[5:3] and is the delay, in clock cycles, from the releasing of the internal write to the latching of the first data in. CWL must be correctly set to the corresponding operating clock frequency (see Mode Register 2 (MR2) Definition figure). The overall WRITE latency (WL) is equal to CWL + AL (Mode Register 1 (MR1) Definition figure).

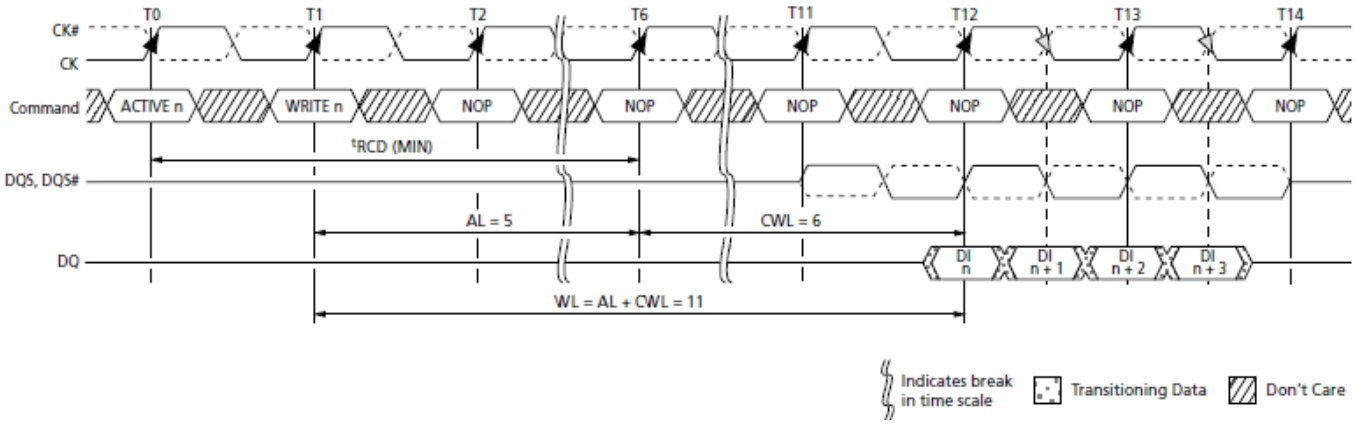


**CAS Write Latency**

## AUTO SELF REFRESH (ASR)

Mode register MR2[6] is used to disable/enable the ASR function. When ASR is disabled, the self refresh mode's refresh rate is assumed to be at the normal 85°C limit (sometimes referred to as 1x refresh rate). In the disabled mode, ASR requires the user to ensure the DRAM never exceeds a $T_C$ of 85°C while in self refresh unless the user enables the SRT feature listed below when the $T_C$ is between 85°C and 95°C.

Enabling ASR assumes the DRAM self refresh rate is changed automatically from 1x to 2x when $T_C$ > 85°C. This enables the user to operate the DRAM beyond the standard 85°C limit up to the optional extended temperature range of 95°C while in self refresh mode.

The standard self refresh current test specifies test conditions to normal case temperature (85°C) only, meaning if ASR is enabled, the standard self refresh current specifications do not apply (see Extended Temperature Usage).

## SELF REFRESH TEMPERATURE (SRT)

Mode register MR2[7] is used to disable/enable the SRT function. When SRT is disabled, the self refresh mode's refresh rate is assumed to be at the normal 85°C limit (sometimes referred to as 1x refresh rate). In the disabled mode, SRT requires the user to ensure the DRAM never exceeds a $T_C$ of 85°C while in self refresh mode unless the user enables ASR.

When SRT is enabled, the DRAM self refresh is changed internally from 1x to 2x, regardless of the case temperature. This enables the user to operate the DRAM beyond the standard 85°C limit up to the optional extended temperature range of 95°C while in self refresh mode. The standard self refresh current test specifies test conditions to normal case temperature (85°C) only, meaning if SRT is enabled, the standard self refresh current specifications do not apply (see Extended Temperature Usage).

## SRT vs. ASR

If the normal case temperature limit of 85°C is not exceeded, neither SRT nor ASR is required, and both can be disabled throughout operation. However, if the extended temperature option of 95°C is needed, the user is required to provide a 2x refresh rate during (manual) refresh and to enable either the SRT or the ASR to ensure self refresh is performed at the 2x rate.

SRT forces the DRAM to switch the internal self refresh rate from 1x to 2x. Self refresh is performed at the 2x refresh rate regardless of the case temperature.

ASR automatically switches the DRAM's internal self refresh rate from 1x to 2x. However, while in self refresh mode, ASR enables the refresh rate to automatically adjust between 1x to 2x over the supported temperature range. One other disadvantage with ASR is the DRAM cannot always switch from a 1x to a 2x refresh rate at an exact case temperature of 85°C. Although the DRAM will support data integrity when it switches from a 1x to a 2x refresh rate, it may switch at a lower temperature than 85°C.

Since only one mode is necessary, SRT and ASR cannot be enabled at the same time.

## DYNAMIC ODT

The dynamic ODT ($R_{TT(WR)}$)) feature is defined by MR2[10, 9]. Dynamic ODT is enabled when a value is selected. This new DDR3 SDRAM feature enables the ODT termination value to change without issuing an MRS command, essentially changing the ODT termination on-the-fly.

With dynamic ODT ($R_{TT(WR)}$) enabled, the DRAM switches from normal ODT ($R_{TT,nom}$) to dynamic ODT ($R_{TT(WR)}$) when beginning a WRITE burst and subsequently switches back to ODT ($R_{TT,nom}$) at the completion of the WRITE burst. If $R_{TT,nom}$ is disabled, the $R_{TT,nom}$ value will be High-Z. Special timing parameters must be adhered to when dynamic ODT ($R_{TT(WR)}$) is enabled: ODTLcnw, ODTLcnw4, ODTLcnw8, ODTH4, ODTH8,and tADC.

Dynamic ODT is only applicable during WRITE cycles. If ODT ($R_{TT,nom}$) is disabled, dynamic ODT ($R_{TT(WR)}$) is still permitted. $R_{TT,nom}$ and $R_{TT(WR)}$ can be used independent of one other. Dynamic ODT is not available during write leveling mode, regardless of the state of ODT ($R_{TT,nom}$). For details on dynamic ODT operation, refer to Dynamic ODT.

## Mode Register 3 (MR3)

The mode register 3 (MR3) controls additional functions and features not available in the other mode registers. Currently defined is the MULTIPURPOSE REGISTER (MPR).

This function is controlled via the bits shown in Mode Register 3 (MR3) Definition figure. The MR3 is programmed via the LOAD MODE command and retains the stored information until it is programmed again or until the device loses power. Reprogramming the MR3 register will not alter the contents of the memory array, provided it is performed correctly. The MR3 register must be loaded when all banks are idle and no data bursts are in progress, and the controller must wait the specified time tMRD and tMOD before initiating a subsequent operation.

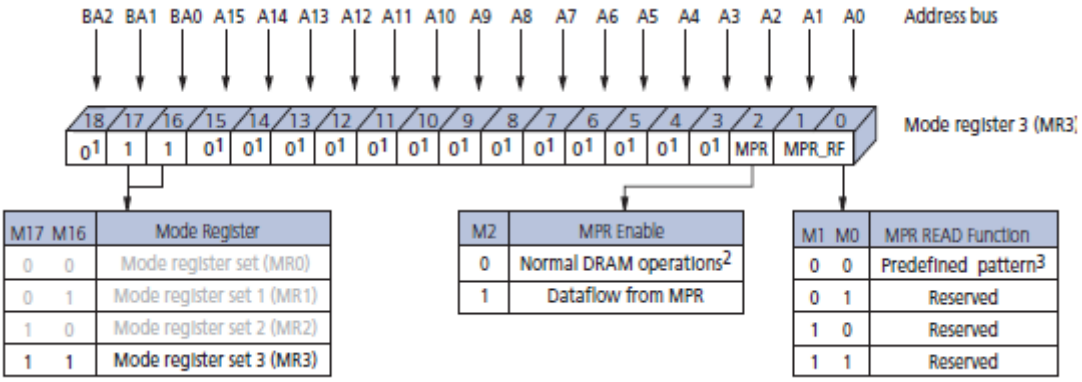


**Note:**

1. MR3[18 and 15:3] are reserved for future use and must all be programmed to 0.
2. When MPR control is set for normal DRAM operation, MR3[1, 0] will be ignored.
3. Intended to be used for READ synchronization.

## MULTIPURPOSE REGISTER (MPR)

The MULTIPURPOSE REGISTER function is used to output a predefined system timing calibration bit sequence. Bit 2 is the master bit that enables or disables access to the MPR register, and bits 1 and 0 determine which mode the MPR is placed in. The basic concept of the multipurpose register is shown in Multipurpose Register (MPR) Block Diagram figure.

If MR3[2] is a 0, then the MPR access is disabled, and the DRAM operates in normal mode. However, if MR3[2] is a 1, then the DRAM no longer outputs normal read data but outputs MPR data as defined by MR3[0, 1]. If MR3[0, 1] is equal to 00, then a predefined read pattern for system calibration is selected.

To enable the MPR, the MRS command is issued to MR3, and MR3[2] = 1. Prior to issuing the MRS command, all banks must be in the idle state (all banks are precharged, and tRP is met). When the MPR is enabled, any subsequent READ or RDAP commands are redirected to the multipurpose register. The resulting operation when either a READ or a RDAP command is issued, is defined by MR3[1:0] when the MPR is enabled (see MPR Readouts and Burst Order Bit Mapping table). When the MPR is enabled, only READ or RDAP commands are allowed until a subsequent MRS command is issued with the MPR disabled (MR3[2] = 0).

Power-down mode, self refresh, and any other nonREAD/RDAP commands are not allowed during MPR enable mode. The RESET function is supported during MPR enable mode.

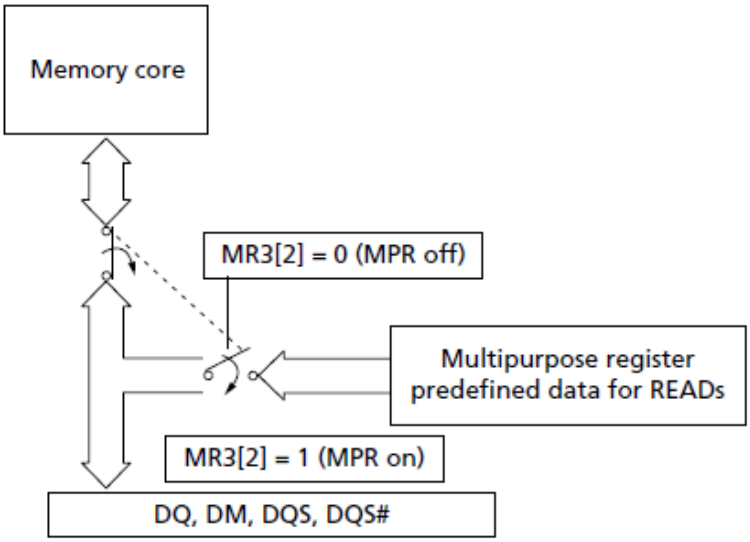


**Multipurpose Register (MPR) Block Diagram**

**Note:**

1. A predefined data pattern can be read out of the MPR with an external READ command.
2. MR3[2] defines whether the data flow comes from the memory core or the MPR. When the data flow is defined, the MPR contents can be read out continuously with a regular READ or RDAP command.

### MPR Functional Description of MR3 Bits

| MR3[2] | MR3[1:0] | Function |
|---|---|---|
| MPR | MPR READ Function | |
| 0 | "Don't Care" | Normal operation, no MPR transaction<br>All subsequent READs come from the DRAM memory array All subsequent WRITEs go to the DRAM memory array |
| 1 | A[1:0]<br>(see MPR Readouts and Burst Order Bit Mapping table) | Enable MPR mode, subsequent READ/RDAP commands defined by bits 1 and 2 |

## MPR Functional Description

The MPR JEDEC definition enables either a prime DQ (DQ0 on a x8; on a x16, DQ0 =lower byte and DQ8 = upper byte) to output the MPR data with the remaining DQs driven LOW, or for all DQs to output the MPR data. The MPR readout supports fixed READ burst and READ burst chop (MRS and OTF via A12/BC#) with regular READ latencies and AC timings applicable, provided the DLL is locked as required.

MPR addressing for a valid MPR read is as follows:

• A[1:0] must be set to 00 as the burst order is fixed per nibble
• A2 selects the burst order:
– BL8, A2 is set to 0, and the burst order is fixed to 0, 1, 2, 3, 4, 5, 6, 7
• For burst chop 4 cases, the burst order is switched on the nibble base along with the following:
– A2 = 0; burst order = 0, 1, 2, 3
– A2 = 1; burst order = 4, 5, 6, 7
• Burst order bit 0 (the first bit) is assigned to LSB, and burst order bit 7 (the last bit) is assigned to MSB
• A[9:3] are a “Don’t Care”
• A10 is a “Don’t Care”
• A11 is a “Don’t Care”
• A12: Selects burst chop mode on-the-fly, if enabled within MR0
• A13 is a “Don’t Care”
• BA[2:0] are a “Don’t Care”

## MPR Register Address Definitions and Bursting Order

The MPR currently supports a single data format. This data format is a predefined read pattern for system calibration. The predefined pattern is always a repeating 0–1 bit pattern.

Examples of the different types of predefined READ pattern bursts are shown in the following figures.

| MR3[2] | MR3[1:0] | Function | Burst Length | Read A[2:0] | Burst Order and Data Pattern |
|---|---|---|---|---|---|
| 1 | 00 | READ predefined pattern for system calibration | BL8 | 000 | Burst order: 0, 1, 2, 3, 4, 5, 6, 7<br>Predefined pattern: 0, 1, 0, 1, 0, 1, 0, 1 |
| | | | BC4 | 000 | Burst order: 0, 1, 2, 3<br>Predefined pattern: 0, 1, 0, 1 |
| | | | BC4 | 100 | Burst order: 4, 5, 6, 7<br>Predefined pattern: 0, 1, 0, 1 |
| 1 | 01 | RFU | N/A | N/A | N/A |
| | | | N/A | N/A | N/A |
| | | | N/A | N/A | N/A |
| 1 | 10 | RFU | N/A | N/A | N/A |
| | | | N/A | N/A | N/A |
| | | | N/A | N/A | N/A |
| 1 | 11 | RFU | N/A | N/A | N/A |
| | | | N/A | N/A | N/A |
| | | | N/A | N/A | N/A |

**Note:** 1. Burst order bit 0 is assigned to LSB, and burst order bit 7 is assigned to MSB of the selec- ted MPR agent.

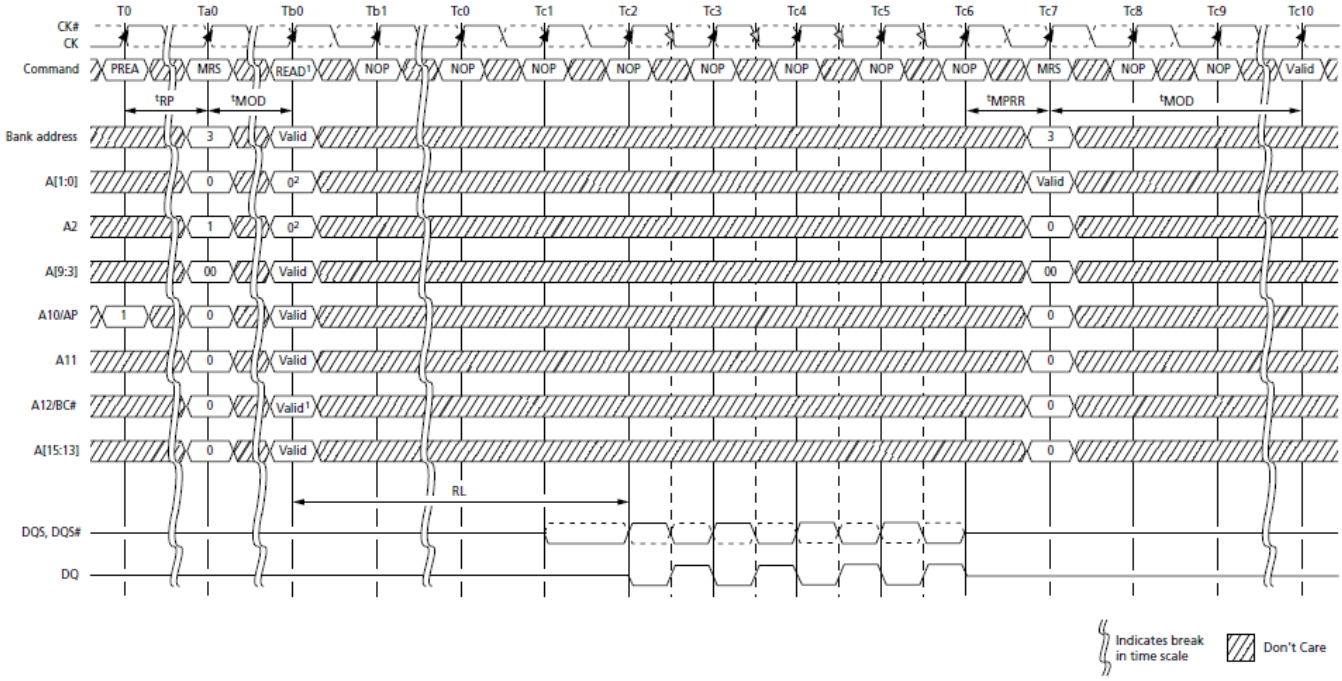


Notes: 1. READ with BL8 either by MRS or OTF.
2. Memory controller must drive 0 on A[2:0].

**MPR System Read Calibration with BL8: Fixed Burst Order Single Readout**

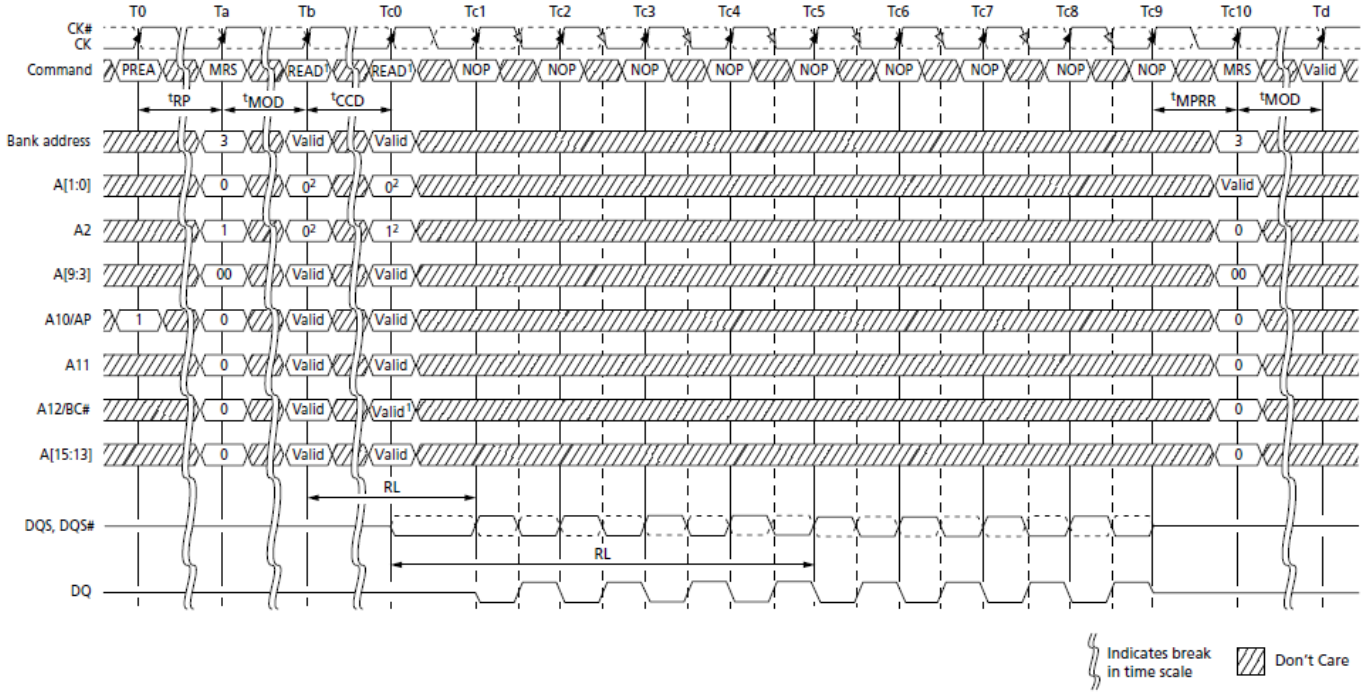


Notes: 1. READ with BL8 either by MRS or OTF.
2. Memory controller must drive 0 on A[2:0].

**MPR System Read Calibration with BL8: Fixed Burst Order, Back-to-Back Readout**

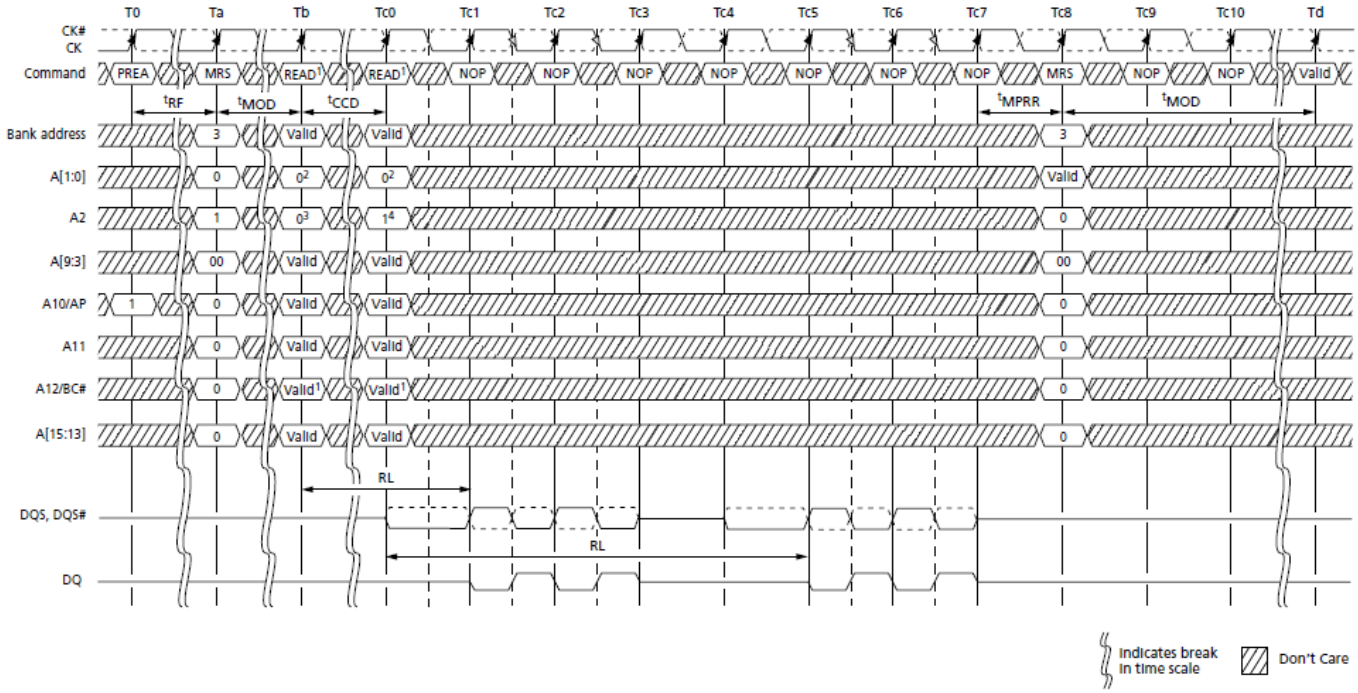


Notes:
1. READ with BC4 either by MRS or OTF.
2. Memory controller must drive 0 on A[1:0].
3. A2 = 0 selects lower 4 nibble bits 0 . . . 3.
4. A2 = 1 selects upper 4 nibble bits 4 . . . 7.

**MPR System Read Calibration with BC4: Lower Nibble, Then Upper Nibble**

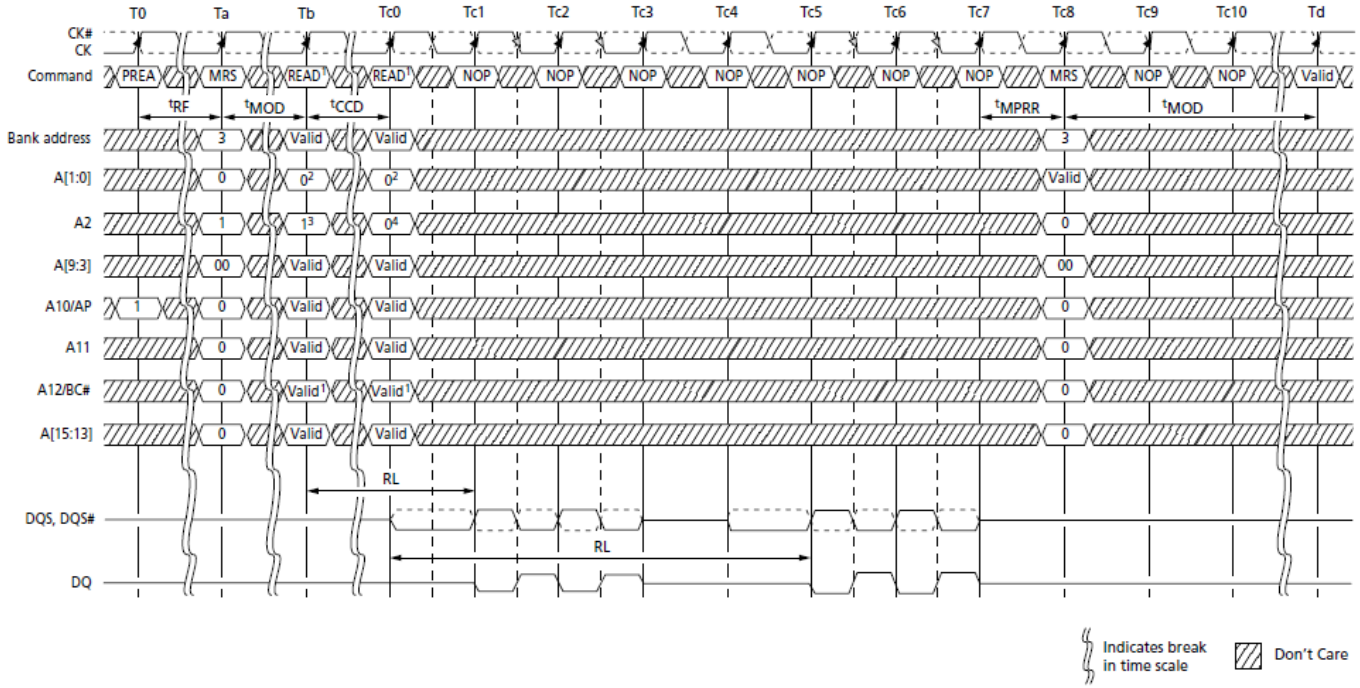


Notes:
1. READ with BC4 either by MRS or OTF.
2. Memory controller must drive 0 on A[1:0].
3. A2 = 1 selects upper 4 nibble bits 4 . . . 7.
4. A2 = 0 selects lower 4 nibble bits 0 . . . 3.

**MPR System Read Calibration with BC4: Upper Nibble, Then Lower Nibble**

## MPR Read Predefined Pattern

The predetermined read calibration pattern is a fixed pattern of 0, 1, 0, 1, 0, 1, 0, 1. The following is an example of using the read out predetermined read calibration pattern.

The example is to perform multiple reads from the multipurpose register to do system level read timing calibration based on the predetermined and standardized pattern.

The following protocol outlines the steps used to perform the read calibration:

1. Precharge all banks
2. After $^{t}$RP is satisfied, set MRS, MR3[2] = 1 and MR3[1:0] = 00. This redirects all subsequent reads and loads the predefined pattern into the MPR. As soon as $^{t}$MRD and $^{t}$MOD are satisfied, the MPR is available
3. Data WRITE operations are not allowed until the MPR returns to the normal DRAM state
4. Issue a read with burst order information (all other address pins are “Don’t Care”):
   - A[1:0] = 00 (data burst order is fixed starting at nibble)
   - A2 = 0 (for BL8, burst order is fixed as 0, 1, 2, 3, 4, 5, 6, 7)
   - A12 = 1 (use BL8)
5. After RL = AL + CL, the DRAM bursts out the predefined read calibration pattern (0, 1, 0, 1, 0, 1, 0, 1)
6. The memory controller repeats the calibration reads until read data capture at memory controller is optimized
7. After the last MPR READ burst and after $^{t}$MPRR has been satisfied, issue MRS,MR3[2] = 0, and MR3[1:0] = “Don’t Care” to the normal DRAM state. All subsequent read and write accesses will be regular reads and writes from/to the DRAM array
8. When $^{t}$MRD and $^{t}$MOD are satisfied from the last MRS, the regular DRAM commands (such as activate a memory bank for regular read or write access) are permitted

## MODE REGISTER SET (MRS) Command

The mode registers are loaded via inputs BA[2:0], A[13:0]. BA[2:0] determine which mode register is programmed:

- BA2 = 0, BA1 = 0, BA0 = 0 for MR0
- BA2 = 0, BA1 = 0, BA0 = 1 for MR1
- BA2 = 0, BA1 = 1, BA0 = 0 for MR2
- BA2 = 0, BA1 = 1, BA0 = 1 for MR3

The MRS command can only be issued (or re-issued) when all banks are idle and in the precharged state ($^{t}$RP is satisfied and no data bursts are in progress). The controller must wait the specified time $^{t}$MRD before initiating a subsequent operation such as an ACTIVATE command (see MRS to MRS Command Timing ($^{t}$MRD) figure). There is also a restriction after issuing an MRS command with regard to when the updated functions become available. This parameter is specified by $^{t}$MOD. Both $^{t}$MRD and $^{t}$MOD parameters are shown in MRS to MRS Command Timing ($^{t}$MRD) figure and MRS to nonMRS Command Timing ($^{t}$MOD) figure. Violating either of these requirements will result in unspecified operation.

## ZQ CALIBRATION Operation

The ZQ CALIBRATION command is used to calibrate the DRAM output drivers ($R_{ON}$) and ODT values ($R_{TT}$) over process, voltage, and temperature, provided a dedicated 240Ω (±1%) external resistor is connected from the DRAM's ZQ ball to $V_{SSQ}$.

DDR3 SDRAM require a longer time to calibrate $R_{ON}$ and ODT at power-up initialization and self refresh exit, and a relatively shorter time to perform periodic calibrations.

DDR3 SDRAM defines two ZQ CALIBRATION commands: ZQCL and ZQCS. An example of ZQ calibration timing is shown below.

All banks must be precharged and tRP must be met before ZQCL or ZQCS commands can be issued to the DRAM. No other activities (other than issuing another ZQCL or ZQCS command) can be performed on the DRAM channel by the controller for the duration of $^{t}$ZQinit or $^{t}$ZQoper. The quiet time on the DRAM channel helps accurately calibrate $R_{ON}$ and ODT. After DRAM calibration is achieved, the DRAM should disable the ZQ ball's current consumption path to reduce power.

ZQ CALIBRATION commands can be issued in parallel to DLL RESET and locking time.

Upon self refresh exit, an explicit ZQCL is required if ZQ calibration is desired.

In dual-rank systems that share the ZQ resistor between devices, the controller must not enable overlap of $^{t}$ZQinit, $^{t}$ZQoper, or $^{t}$ZQCS between ranks.

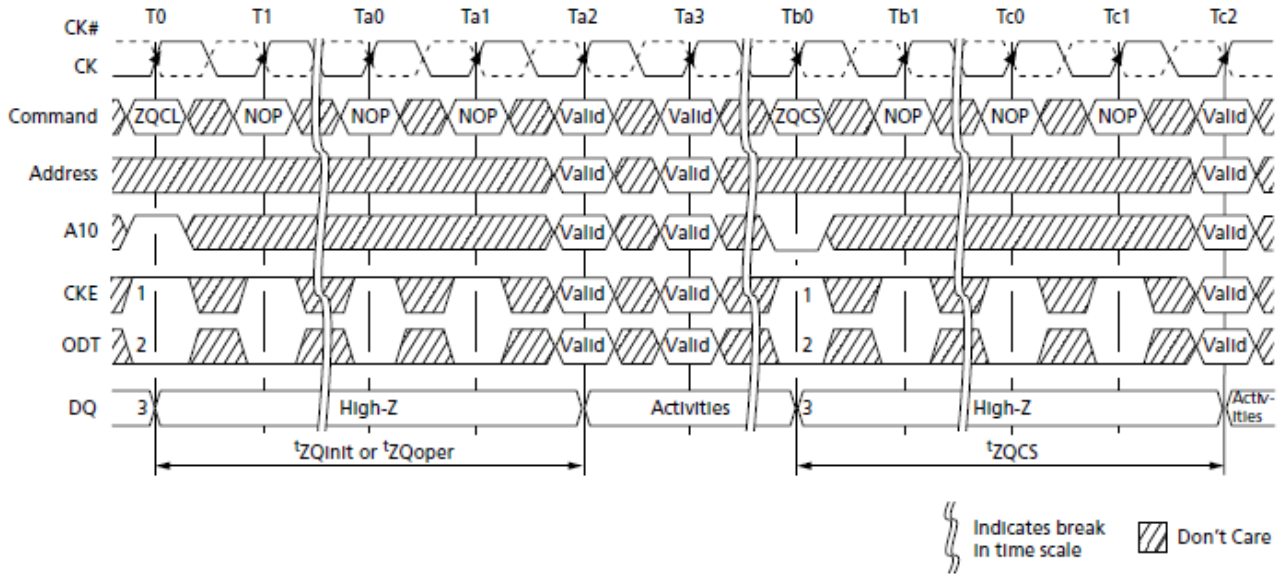


**ZQ CALIBRATION Timing (ZQCL and ZQCS)**

**Note:**

1. CKE must be continuously registered HIGH during the calibration procedure.
2. ODT must be disabled via the ODT signal or the MRS during the calibration procedure.
3. All devices connected to the DQ bus should be High-Z during calibration.

## ACTIVATE Operation

Before any READ or WRITE commands can be issued to a bank within the DRAM, a row in that bank must be opened (activated). This is accomplished via the ACTIVATE command, which selects both the bank and the row to be activated.

After a row is opened with an ACTIVATE command, a READ or WRITE command may be issued to that row, subject to the $^{t}$RCD specification. However, if the additive latency is programmed correctly, a READ or WRITE command may be issued prior to $^{t}$RCD (MIN). In this operation, the DRAM enables a READ or WRITE command to be issued after the ACTIVATE command for that bank, but prior to $^{t}$RCD (MIN) with the requirement that (ACTIVATE-to-READ/WRITE) + AL ≥ $^{t}$RCD (MIN) (see Posted CAS Additive Latency). $^{t}$RCD (MIN) should be divided by the clock period and rounded up to the next whole number to determine the earliest clock edge after the ACTIVATE command on which a READ or WRITE command can be entered. The same procedure is used to convert other specification limits from time units to clock cycles.

When at least one bank is open, any READ-to-READ command delay or WRITE-to-WRITE command delay is restricted to $^{t}$CCD (MIN).

A subsequent ACTIVATE command to a different row in the same bank can only be issued after the previous active row has been closed (precharged). The minimum time interval between successive ACTIVATE commands to the same bank is defined by $^{t}$RC.

A subsequent ACTIVATE command to another bank can be issued while the first bank is being accessed, which results in a reduction of total row-access overhead. The minimum time interval between successive ACTIVATE commands to different banks is defined by $^{t}$RRD. No more than four bank ACTIVATE commands may be issued in a given $^{t}$FAW (MIN) period, and the $^{t}$RRD (MIN) restriction still applies. The $^{t}$FAW (MIN) parameter applies, regardless of the number of banks already opened or closed.

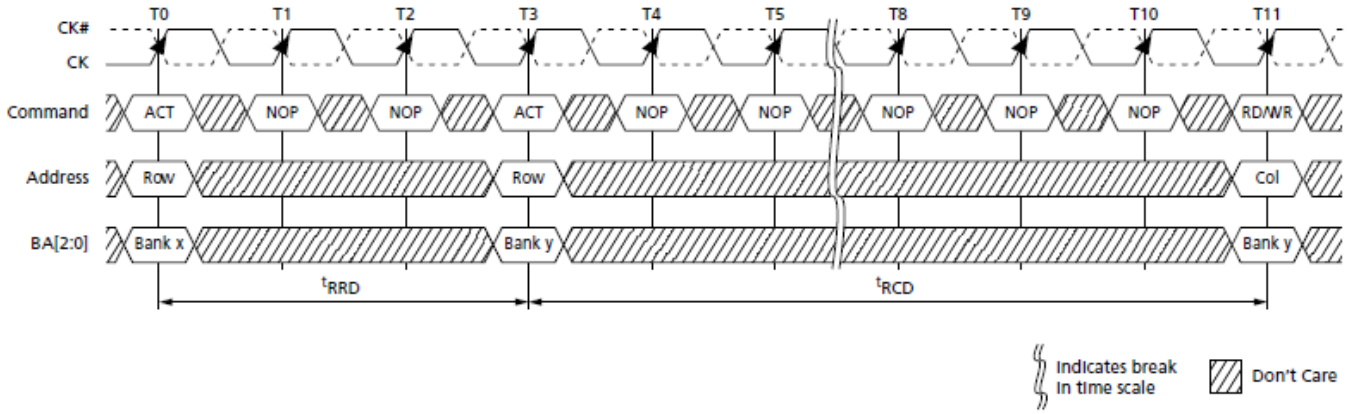


**Example: Meeting $^{t}$RRD (MIN) and $^{t}$RCD (MIN)**

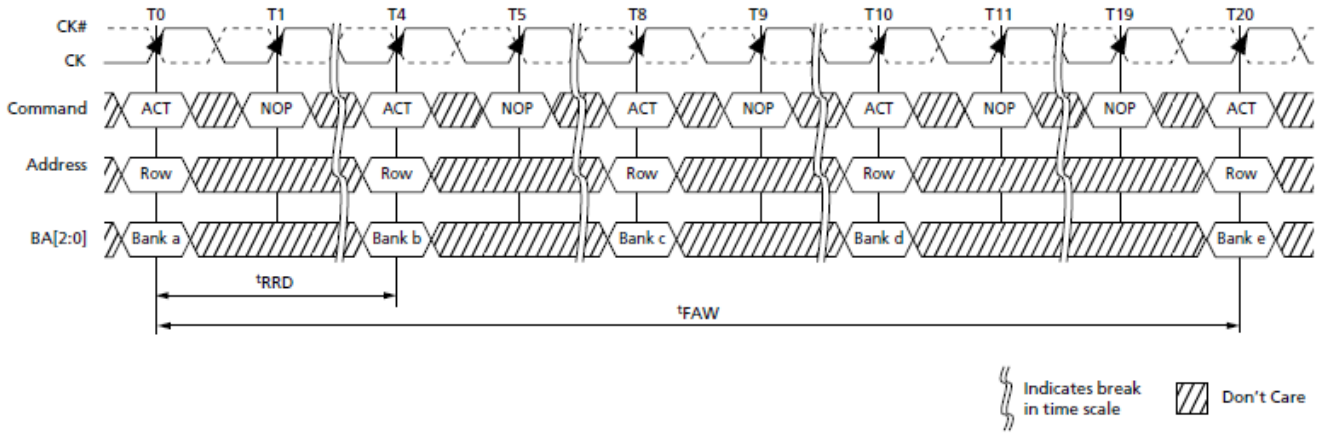


**Example: $^{t}$FAW**

## READ Operation

READ bursts are initiated with a READ command. The starting column and bank addresses are provided with the READ command and auto precharge is either enabled or disabled for that burst access. If auto precharge is enabled, the row being accessed is automatically precharged at the completion of the burst. If auto precharge is disabled, the row will be left open after the completion of the burst.

During READ bursts, the valid data-out element from the starting column address is available READ latency (RL) clocks later. RL is defined as the sum of posted CAS additive latency (AL) and CAS latency (CL) (RL = AL + CL). The value of AL and CL is programmable in the mode register via the MRS command. Each subsequent data-out element is valid nominally at the next positive or negative clock edge (that is, at the next crossing of CK and CK#). READ Latency figure shows an example of RL based on a CL setting of 8 and an AL setting of 0.

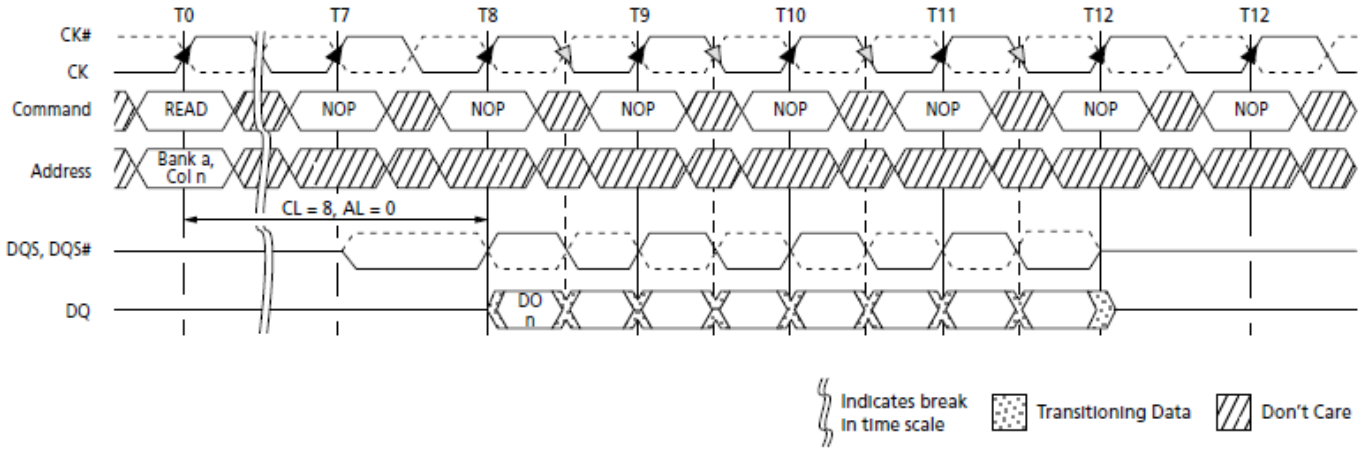


Notes: 1. DO *n* = data-out from column *n*.
2. Subsequent elements of data-out appear in the programmed order following DO *n*.

**READ Latency**

DQS, DQS# is driven by the DRAM along with the output data. The initial LOW state on DQS and HIGH state on DQS# is known as the READ preamble (tRPRE). The LOW state on DQS and the HIGH state on DQS#, coincident with the last data-out element,is known as the READ postamble ($^{t}$RPST). Upon completion of a burst, assuming no other commands have been initiated, the DQ goes High-Z. A detailed explanation of $^{t}$DQSQ (valid data-out skew), $^{t}$QH (data-out window hold), and the valid data window are depicted in Data Strobe Timing – READs figure. A detailed explanation of $^{t}$DQSCK (DQS transition skew to CK) is also depicted in Data Strobe Timing – READs figure.

Data from any READ burst may be concatenated with data from a subsequent READ command to provide a continuous flow of data. The first data element from the new burst follows the last element of a completed burst. The new READ command should be issued $^{t}$CCD cycles after the first READ command. This is shown for BL8 in Consecutive READ Bursts (BL8) figure. If BC4 is enabled, $^{t}$CCD must still be met, which will cause a gap in the data output, as shown in Consecutive READ Bursts (BC4) figure. Nonconsecutive READ data is reflected in Nonconsecutive READ Bursts figure. DDR3 SDRAM does not allow interrupting or truncating any READ burst.

Data from any READ burst must be completed before a subsequent WRITE burst is allowed.

An example of a READ burst followed by a WRITE burst for BL8 is shown in READ (BL8) to WRITE (BL8) figure (BC4 is shown in READ (BC4) to WRITE (BC4) OTF figure). To ensure the READ data is completed before the WRITE data is on the bus, the minimum READ-to-WRITE timing is RL + $^{t}$CCD - WL + 2tCK.

A READ burst may be followed by a PRECHARGE command to the same bank, provided auto precharge is not activated. The minimum READ-to-PRECHARGE command spacing to the same bank is four clocks and must also satisfy a minimum analog time from the READ command. This time is called $^{t}$RTP (READ-to-PRECHARGE). $^{t}$RTP starts AL cycles later than the READ command. Examples for BL8 are shown in READ to PRECHARGE (BL8) figure and BC4 in READ to PRECHARGE (BC4) figure. Following the PRECHARGE command, a subsequent command to the same bank cannot be issued until $^{t}$RP is met. The PRECHARGE command followed by another PRECHARGE command to the same bank is allowed.

However, the precharge period will be determined by the last PRECHARGE command issued to the bank.

If A10 is HIGH when a READ command is issued, the READ with auto precharge function is engaged. The DRAM starts an auto precharge operation on the rising edge, which is AL + $^{t}$RTP cycles after the READ command. DRAM support a tRAS lockout feature (see READ with Auto Precharge (AL = 4, CL = 6) figure). If $^{t}$RAS (MIN) is not satisfied at the edge, the starting point of the auto precharge operation will be delayed until $^{t}$RAS (MIN) is satisfied. If $^{t}$RTP (MIN) is not satisfied at the edge, the starting point of the auto precharge operation is delayed until $^{t}$RTP (MIN) is satisfied. In case the internal precharge is pushed out by $^{t}$RTP, $^{t}$RP starts at the point at which the internal precharge happens (not at the next rising clock edge after this event). The time from READ with auto precharge to the next ACTIVATE command to the same bank is AL + ($^{t}$RTP + $^{t}$RP)*, where * means rounded up to the next integer. In any event, internal precharge does not start earlier than four clocks after the last 8n-bit prefetch.

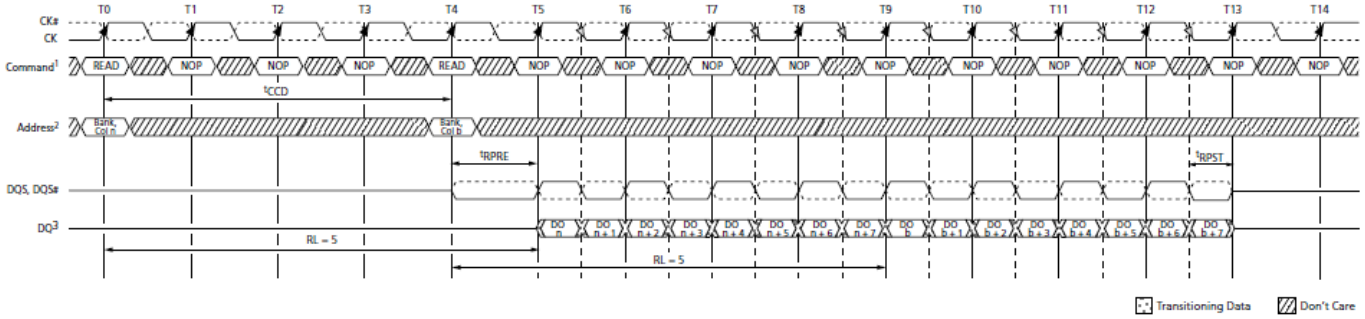


Notes:
1. NOP commands are shown for ease of illustration; other commands may be valid at these times.
2. The BL8 setting is activated by either MR0[1:0] = 00 or MR0[1:0] = 01 and A12 = 1 during READ command at T0 and T4.
3. DO *n* (or *b*) = data-out from column *n* (or column *b*).
4. BL8, RL = 5 (CL = 5, AL = 0).

**Consecutive READ Bursts (BL8)**

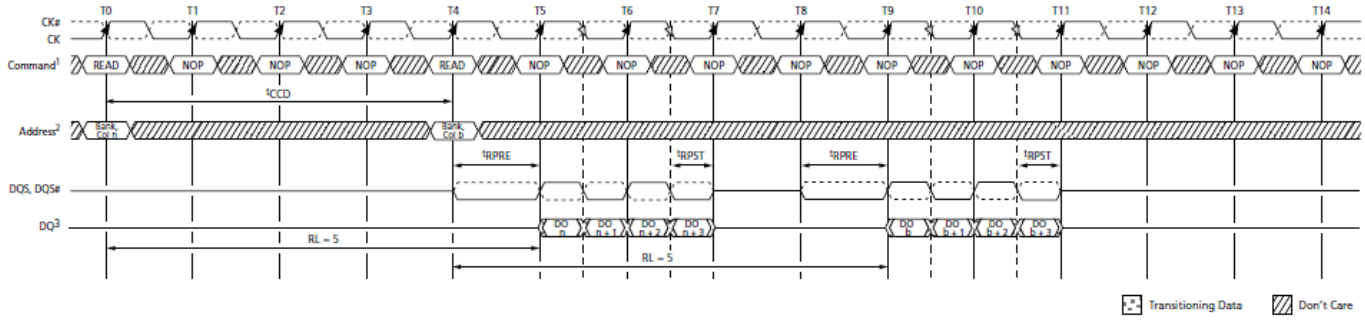


Notes:
1. NOP commands are shown for ease of illustration; other commands may be valid at these times.
2. The BC4 setting is activated by either MR0[1:0] = 10 or MR0[1:0] = 01 and A12 = 0 during READ command at T0 and T4.
3. DO *n* (or *b*) = data-out from column *n* (or column *b*).
4. BC4, RL = 5 (CL = 5, AL = 0).

**Consecutive READ Bursts (BC4)**

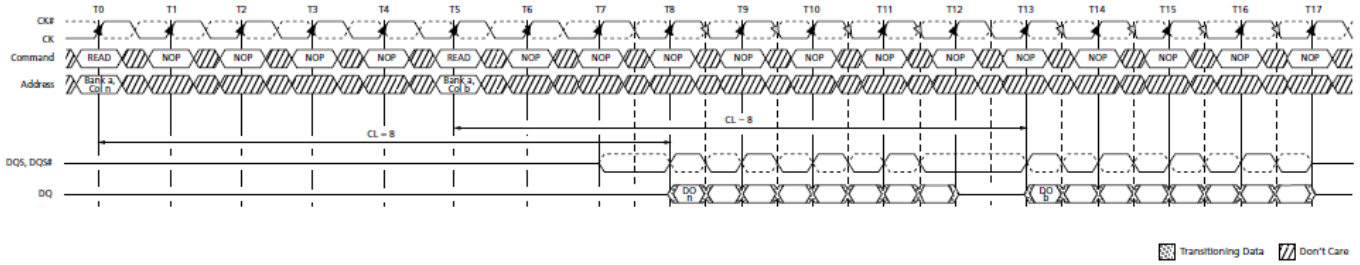


Notes: 1. AL = 0, RL = 8.
2. DO *n* (or *b*) = data-out from column *n* (or column *b*).
3. Seven subsequent elements of data-out appear in the programmed order following DO *n*.
4. Seven subsequent elements of data-out appear in the programmed order following DO *b*.

**Nonconsecutive READ Bursts**

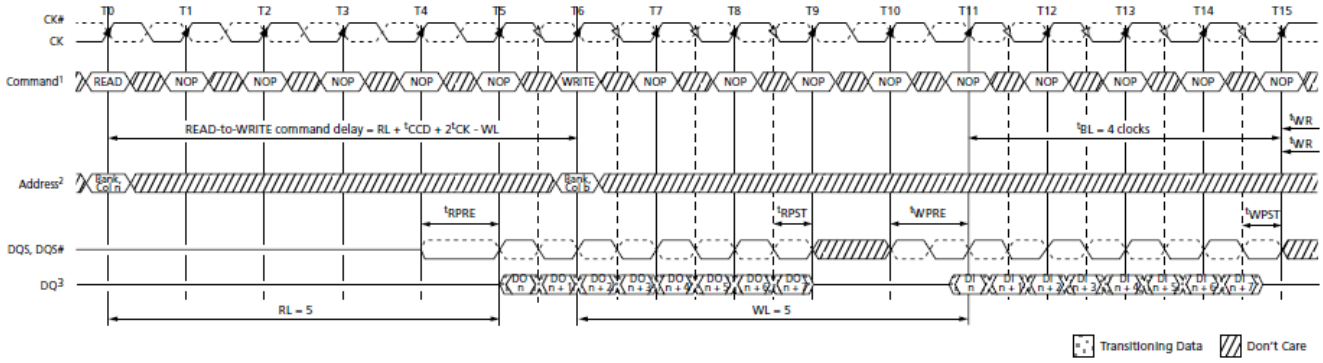


Notes: 1. NOP commands are shown for ease of illustration; other commands may be valid at these times.
2. The BL8 setting is activated by either MR0[1:0] = 00 or MR0[1:0] = 01 and A12 = 1 during the READ command at T0, and the WRITE command at T6.
3. DO *n* = data-out from column, DI *b* = data-in for column *b*.
4. BL8, RL = 5 (AL = 0, CL = 5), WL = 5 (AL = 0, CWL = 5).

**READ (BL8) to WRITE (BL8)**

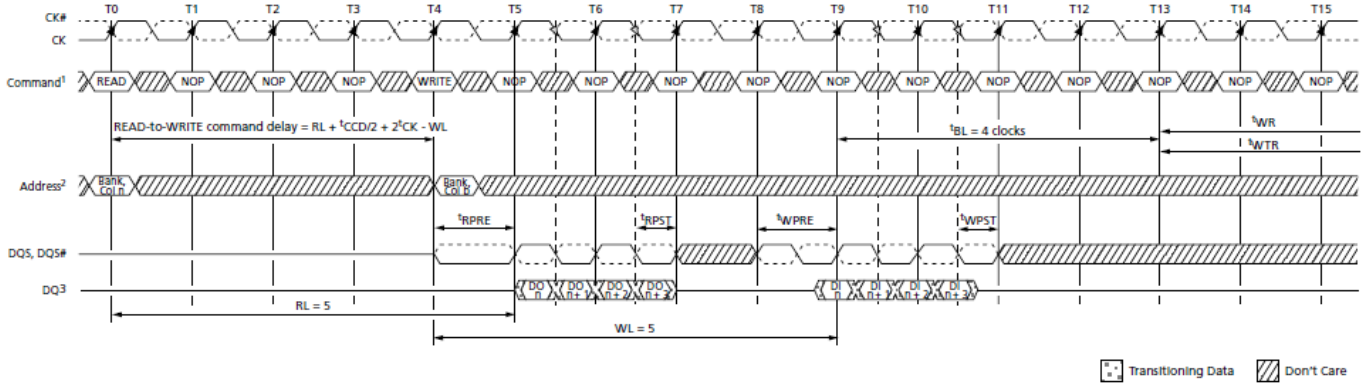


Notes:
1. NOP commands are shown for ease of illustration; other commands may be valid at these times.
2. The BC4 OTF setting is activated by MR0[1:0] and A12 = 0 during READ command at T0 and WRITE command at T4.
3. DO *n* = data-out from column *n*; DI *n* = data-in from column *b*.
4. BC4, RL = 5 (AL - 0, CL = 5), WL = 5 (AL = 0, CWL = 5).

**READ (BC4) to WRITE (BC4) OTF**

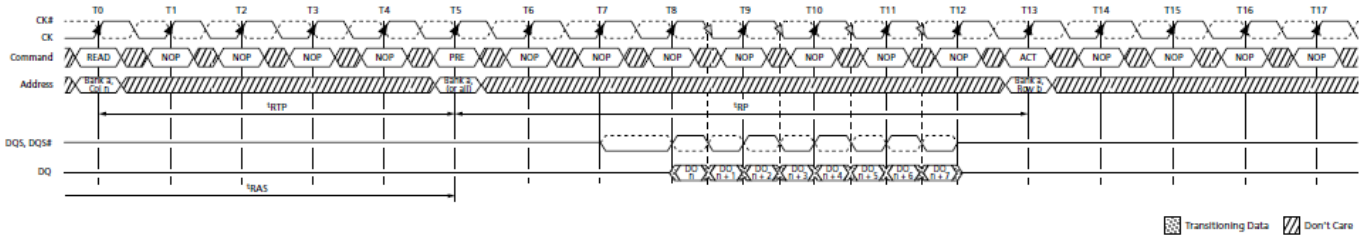


**READ to PRECHARGE (BL8)**

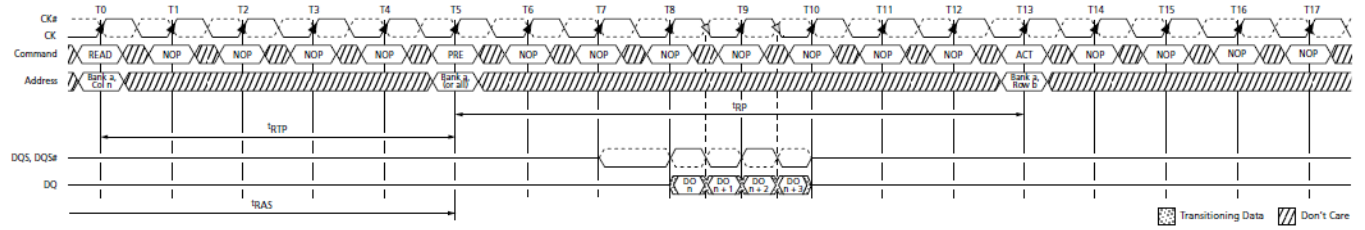


**READ to PRECHARGE (BC4)**

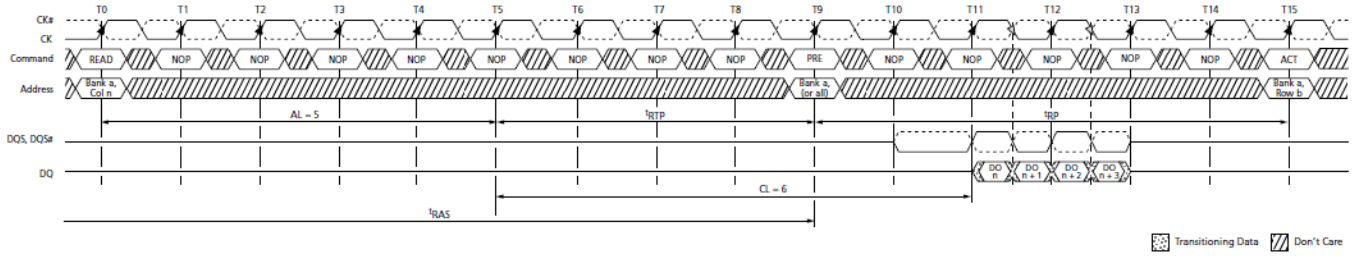


**READ to PRECHARGE (AL = 5, CL = 6)**

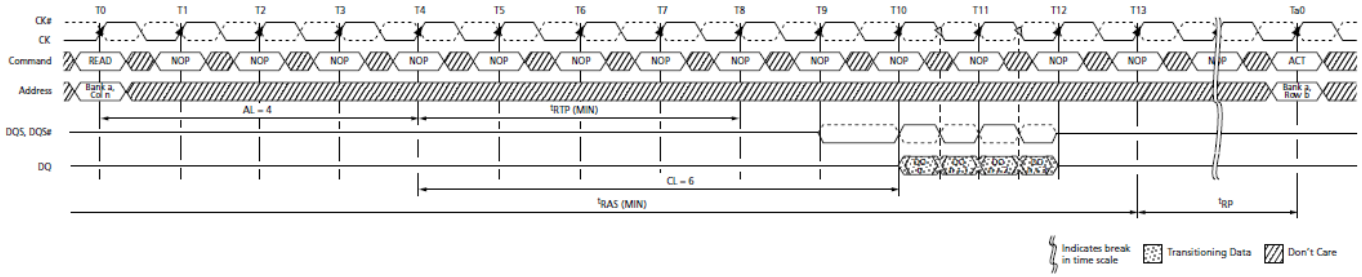


**READ with Auto Precharge (AL = 4, CL = 6)**

DQS to DQ output timing is shown in Data Output Timing – $^{t}$DQSQ and Data Valid Window figure. The DQ transitions between valid data outputs must be within $^{t}$DQSQ of the crossing point of DQS, DQS#. DQS must also maintain a minimum HIGH and LOW time of $^{t}$QSH and $^{t}$QSL. Prior to the READ preamble, the DQ balls will either be floating or terminated, depending on the status of the ODT signal.

Data Strobe Timing – READs figure shows the strobe-to-clock timing during a READ. The crossing point DQS, DQS# must transition within ±$^{t}$DQSCK of the clock crossing point. The data out has no timing relationship to CK, only to DQS, as shown in Data Strobe Timing – READs figure.

Data Strobe Timing – READs figure also shows the READ preamble and postamble. Typically, both DQS and DQS# are High-Z to save power ($V_{DDQ}$). Prior to data output from the DRAM,DQS is driven LOW and DQS# is HIGH for tRPRE. This is known as the READ preamble.

The READ postamble, $^{t}$RPST, is one half clock from the last DQS, DQS# transition. During the READ postamble, DQS is driven LOW and DQS# is HIGH. When complete, the DQ is disabled or continues terminating, depending on the state of the ODT signal. $^{t}$RPST Timing figure demonstrates how to measure $^{t}$RPST.

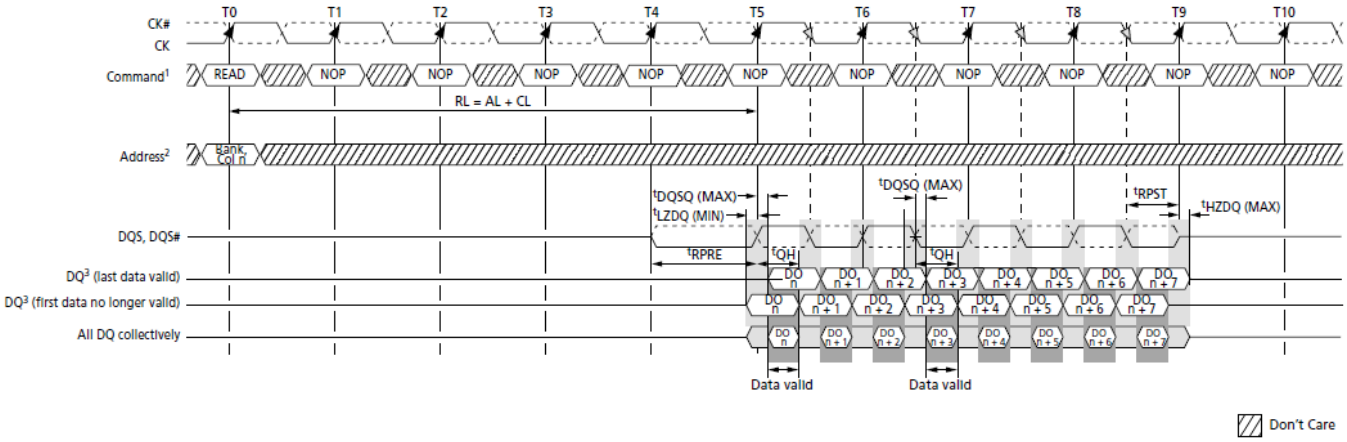


**Data Output Timing – $^{t}$DQSQ and Data Valid Window**

**Note:**

1. NOP commands are shown for ease of illustration; other commands may be valid at these times.
2. The BL8 setting is activated by either MR0[1, 0] = 0, 0 or MR0[0, 1] = 0, 1 and A12 = 1 during READ command at T0.
3. DO n = data-out from column n.
4. BL8, RL = 5 (AL = 0, CL = 5).
5. Output timings are referenced to VDDQ/2 and DLL on and locked.
6. $^{t}$DQSQ defines the skew between DQS, DQS# to data and does not define DQS, DQS# to CK.
7. Early data transitions may not always happen at the same DQ. Data transitions of a DQ can be early or late within a burst.

$^{t}$HZ and $^{t}$LZ transitions occur in the same access time as valid data transitions. These parameters are referenced to a specific voltage level that specifies when the device output is no longer driving $^{t}$HZDQS and $^{t}$HZDQ, or begins driving $^{t}$LZDQS, $^{t}$LZDQ. Method for Calculating $^{t}$LZ and $^{t}$HZ figure shows a method of calculating the point when the device is no longer driving $^{t}$HZDQS and $^{t}$HZDQ, or begins driving $^{t}$LZDQS, $^{t}$LZDQ, by measuring the signal at two different voltages. The actual voltage measurement points are not critical as long as the calculation is consistent. The parameters $^{t}$LZDQS, $^{t}$LZDQ, $^{t}$HZDQS, and $^{t}$HZDQ are defined as single-ended.

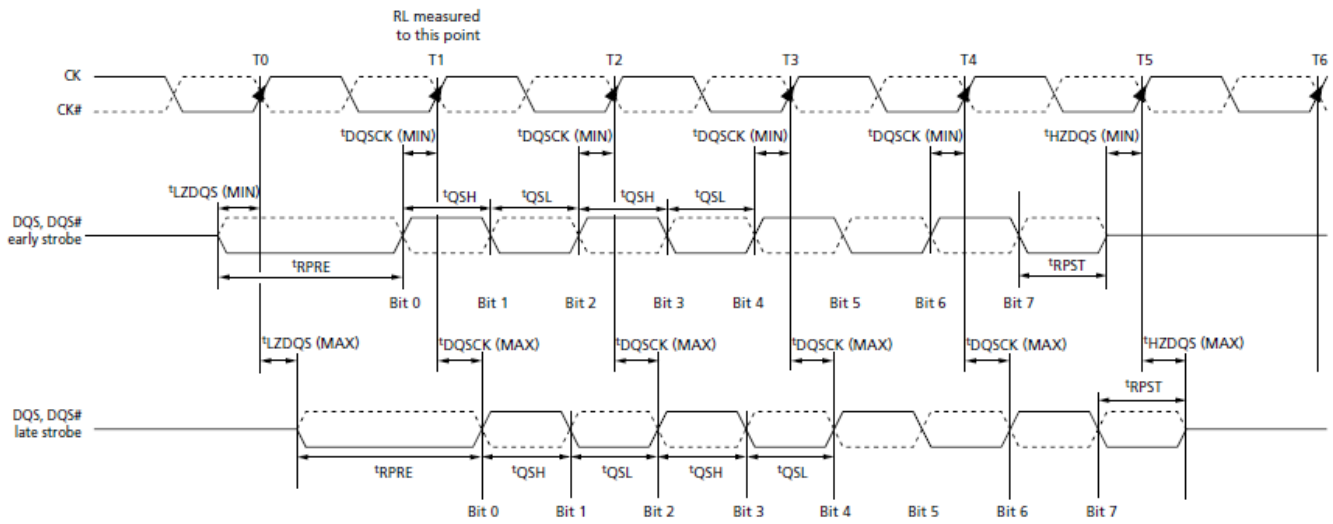


**Data Strobe Timing – READs**

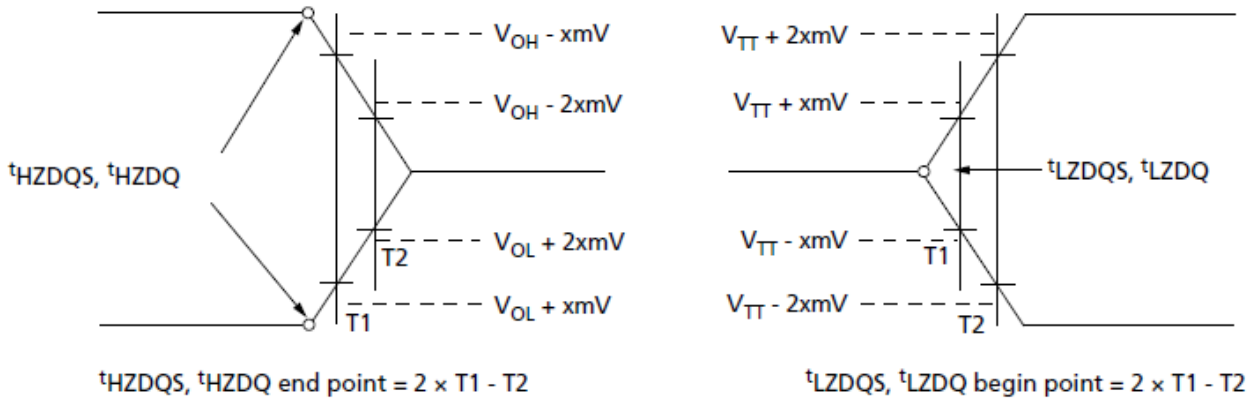


**Method for Calculating tLZ and tHZ**

**Note:**

1. Within a burst, the rising strobe edge is not necessarily fixed at tDQSCK (MIN) or tDQSCK (MAX). Instead, the rising strobe edge can vary between tDQSCK (MIN) and tDQSCK (MAX).
2. The DQS HIGH pulse width is defined by tQSH, and the DQS LOW pulse width is defined by tQSL. Likewise, tLZDQS (MIN) and tHZDQS (MIN) are not tied to tDQSCK (MIN) (early strobe case), and tLZDQS (MAX) and tHZDQS (MAX) are not tied to tDQSCK (MAX) (late strobe case); however, they tend to track one another.
3. The minimum pulse width of the READ preamble is defined by tRPRE (MIN). The minimum pulse width of the READ postamble is defined by tRPST (MIN).

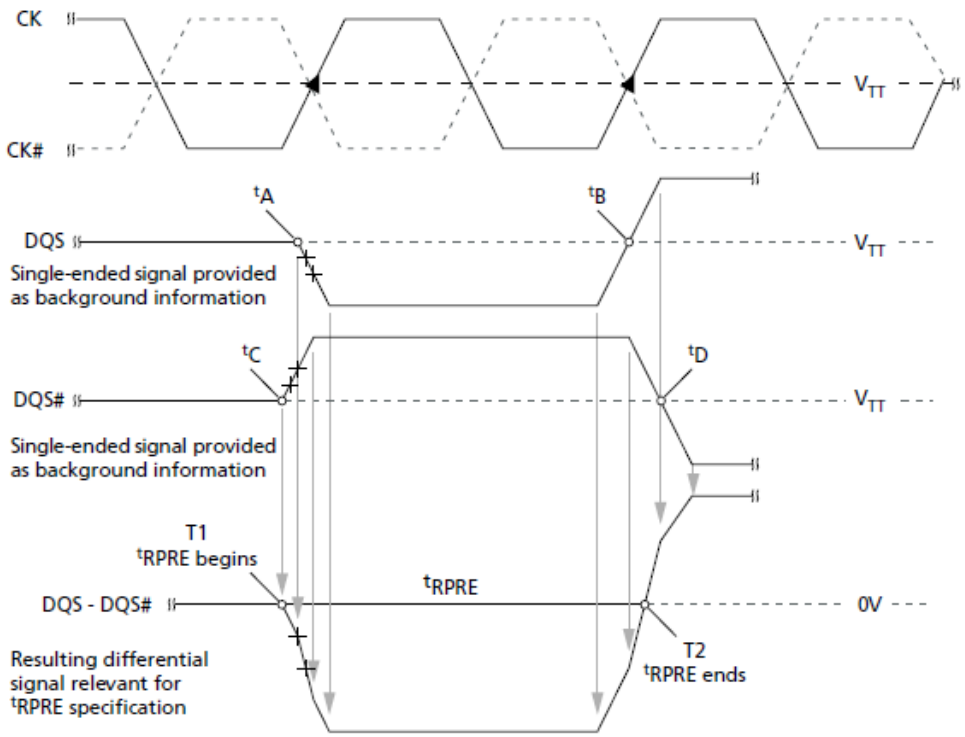


**tRPRE Timing**

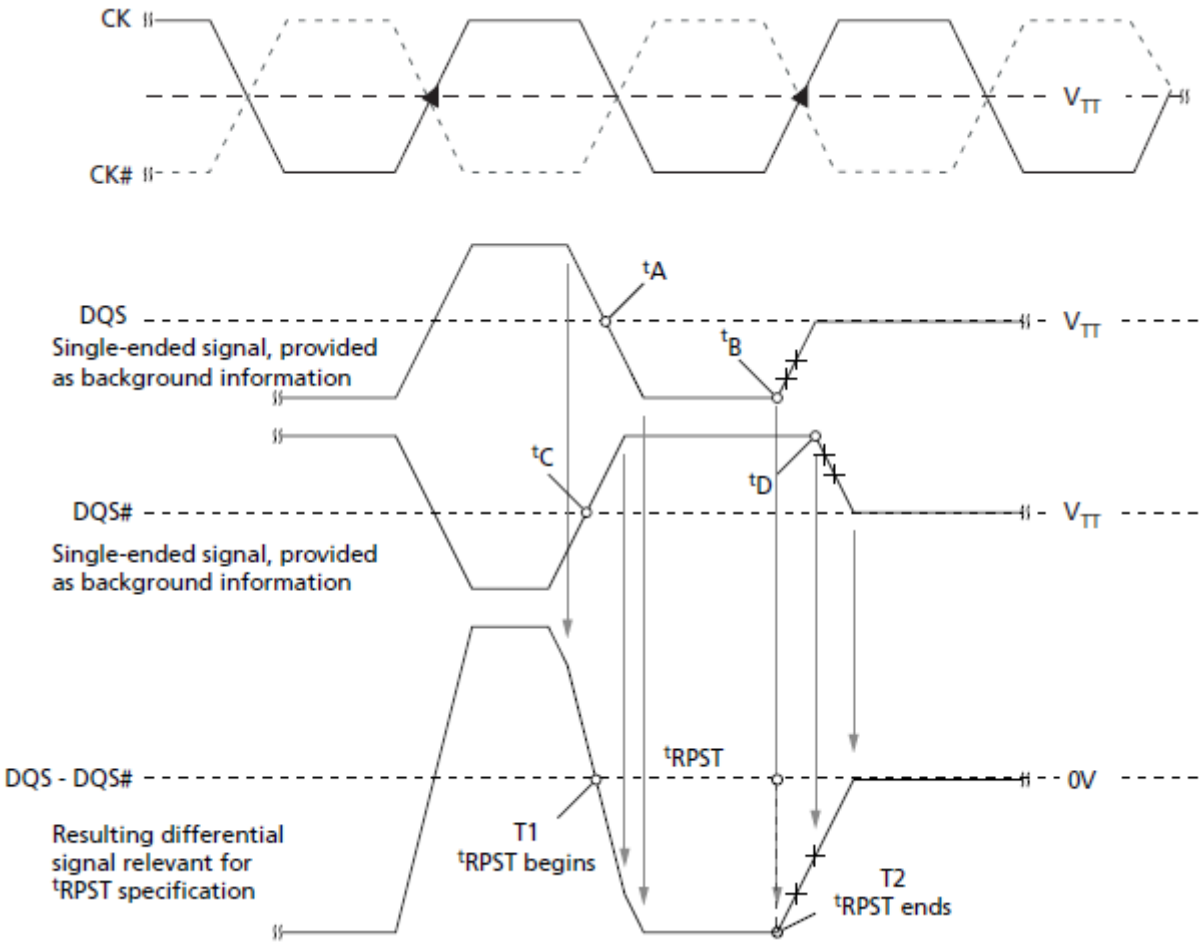


**tRPST Timing**

## WRITE Operation

WRITE bursts are initiated with a WRITE command. The starting column and bank addresses are provided with the WRITE command, and auto precharge is either enabled or disabled for that access. If auto precharge is selected, the row being accessed is precharged at the end of the WRITE burst. If auto precharge is not selected, the row will remain open for subsequent accesses. After a WRITE command has been issued, the WRITE burst may not be interrupted. For the generic WRITE commands used in WRITE Burst figure through WRITE (BC4 Mode Register Setting) to PRECHARGE figure, auto precharge is disabled.

During WRITE bursts, the first valid data-in element is registered on a rising edge of DQS following the WRITE latency (WL) clocks later and subsequent data elements will be registered on successive edges of DQS. WRITE latency (WL) is defined as the sum of posted CAS additive latency (AL) and CAS WRITE latency (CWL): WL = AL + CWL. The values of AL and CWL are programmed in the MR0 and MR2 registers, respectively. Prior to the first valid DQS edge, a full cycle is needed (including a dummy crossover of DQS,DQS#) and specified as the WRITE preamble shown in WRITE Burst figure. The half cycle on DQS following the last data-in element is known as the WRITE postamble.

The time between the WRITE command and the first valid edge of DQS is WL clocks ±$^{t}$DQSS. Consecutive WRITE (BL8) to WRITE (BL8) figure through WRITE (BC4 Mode Register Setting) to PRECHARGE figure show the nominal case where $^{t}$DQSS = 0ns; however, WRITE Burst figure includes $^{t}$DQSS (MIN) and $^{t}$DQSS (MAX) cases.

Data may be masked from completing a WRITE using data mask. The data mask occurs on the DM ball aligned to the WRITE data. If DM is LOW, the WRITE completes normally. If DM is HIGH, that bit of data is masked.

Upon completion of a burst, assuming no other commands have been initiated, the DQ will remain High-Z, and any additional input data will be ignored.

Data for any WRITE burst may be concatenated with a subsequent WRITE command to provide a continuous flow of input data. The new WRITE command can be $^{t}$CCD clocks following the previous WRITE command. The first data element from the new burst is applied after the last element of a completed burst. Consecutive WRITE (BL8) to WRITE (BL8) figure and Consecutive WRITE (BC4) to WRITE (BC4) via OTF figure show concatenated bursts. An example of nonconsecutive WRITEs is shown in Nonconsecutive WRITE to WRITE figure.

Data for any WRITE burst may be followed by a subsequent READ command after tWTR has been met (see WRITE (BL8) to READ (BL8) figure), WRITE to READ (BC4 Mode Register Setting) figure, and WRITE (BC4 OTF) to READ (BC4 OTF) figure).

Data for any WRITE burst may be followed by a subsequent PRECHARGE command,providing $^{t}$WR has been met, as shown in WRITE (BL8) to PRECHARGE figure and WRITE (BC4 Mode Register Setting) to PRECHARGE figure.

Both $^{t}$WTR and $^{t}$WR starting time may vary, depending on the mode register settings (fixed BC4, BL8 versus OTF).

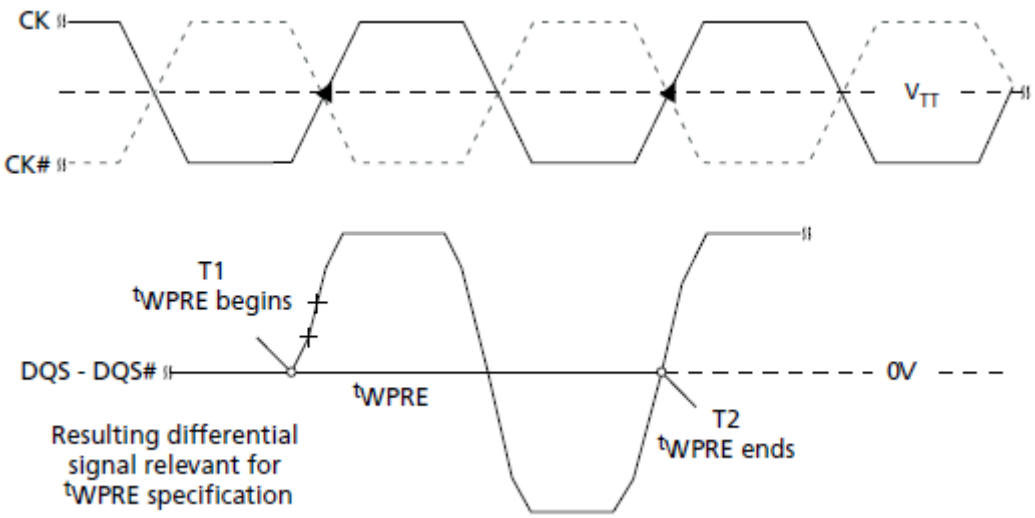


**$^{t}$WPRE Timing**

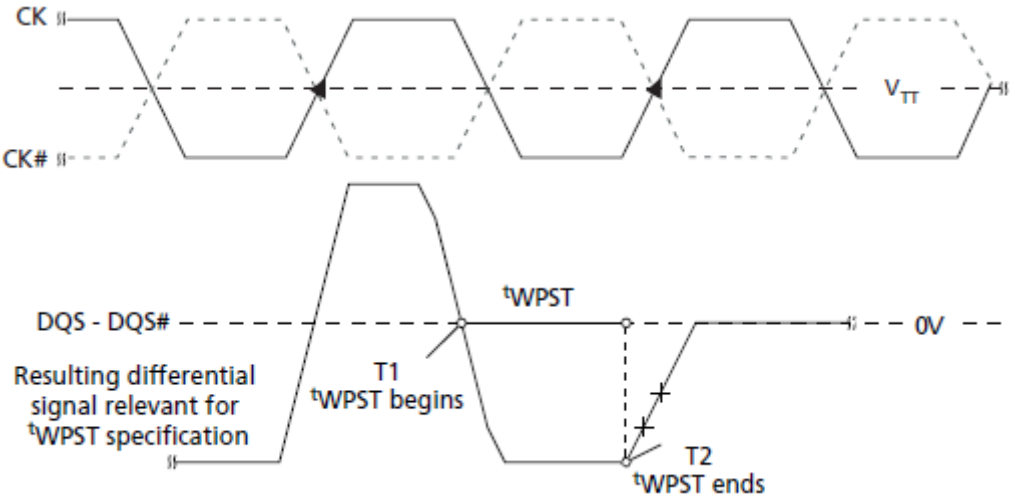


**$^{t}$WPST Timing**

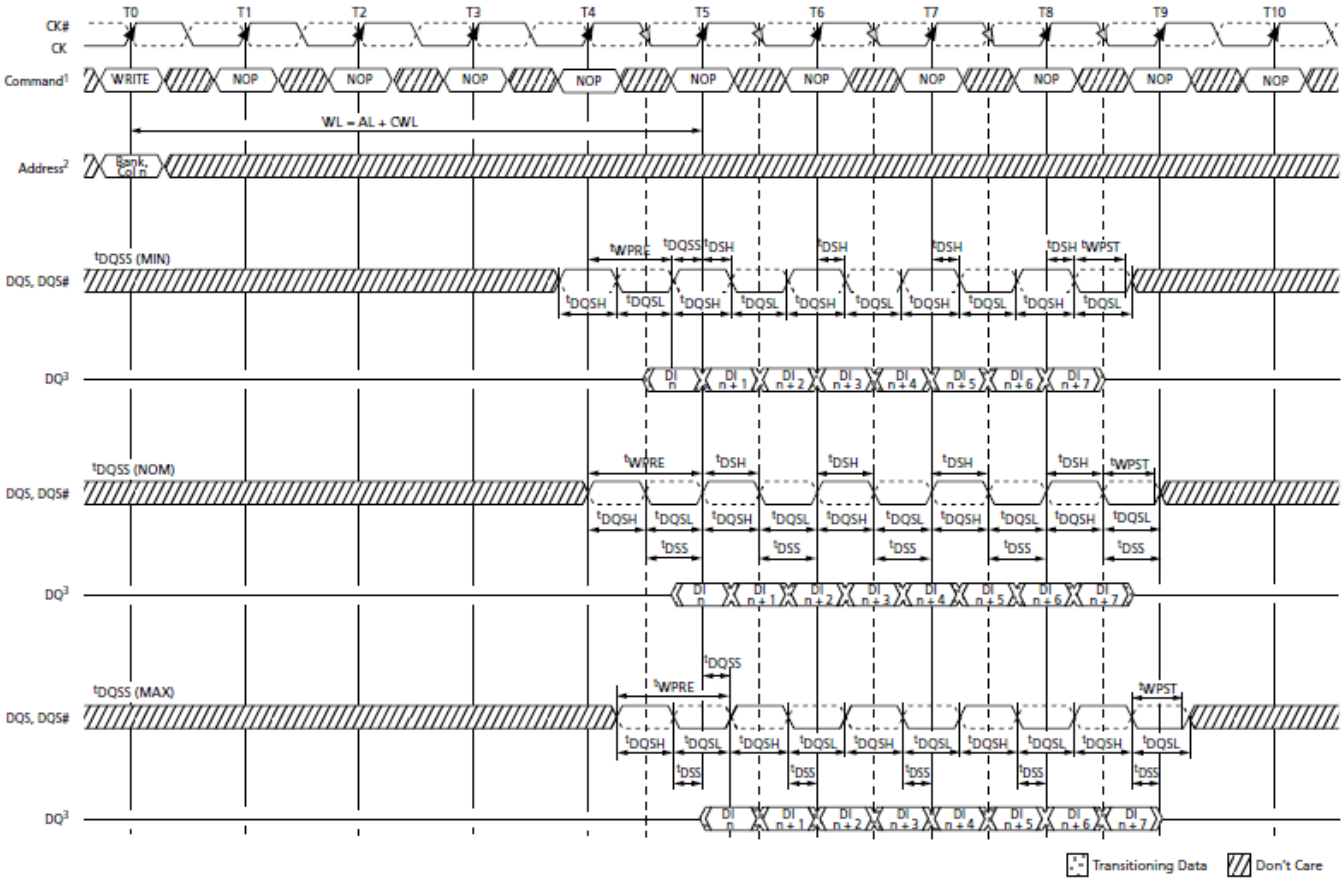


**WRITE Burst**

**Note:**

1. NOP commands are shown for ease of illustration; other commands may be valid at these times.
2. The BL8 setting is activated by either MR0[1:0] = 00 or MR0[1:0] = 01 and A12 = 1 during the WRITE command at T0.
3. DI n = data-in for column n.
4. BL8, WL = 5 (AL = 0, CWL = 5).
5. $^{t}$DQSS must be met at each rising clock edge.
6. $^{t}$WPST is usually depicted as ending at the crossing of DQS, DQS#; however, $^{t}$WPST actually ends when DQS no longer drives LOW and DQS# no longer drives HIGH.

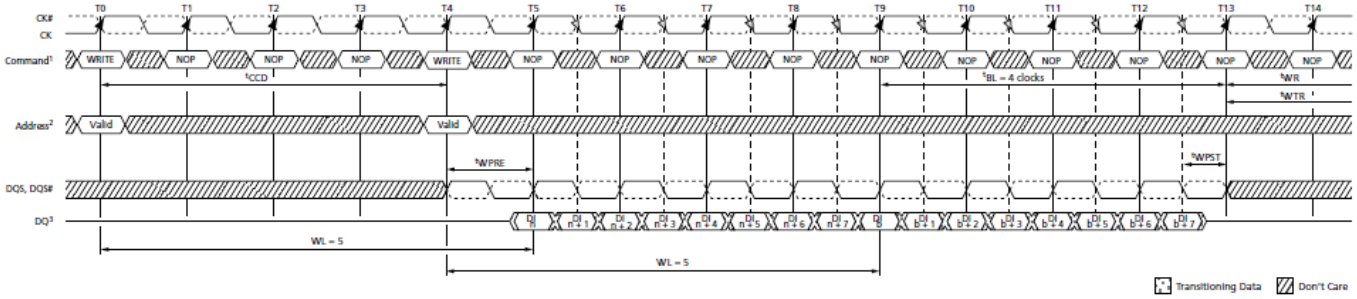


Notes:
1. NOP commands are shown for ease of illustration; other commands may be valid at these times.
2. The BL8 setting is activated by either MR0[1:0] = 00 or MR0[1:0] = 01 and A12 = 1 during the WRITE commands at T0 and T4.
3. DI *n* (or *b*) = data-in for column *n* (or column *b*).
4. BL8, WL = 5 (AL = 0, CWL = 5).

**Consecutive WRITE (BL8) to WRITE (BL8)**

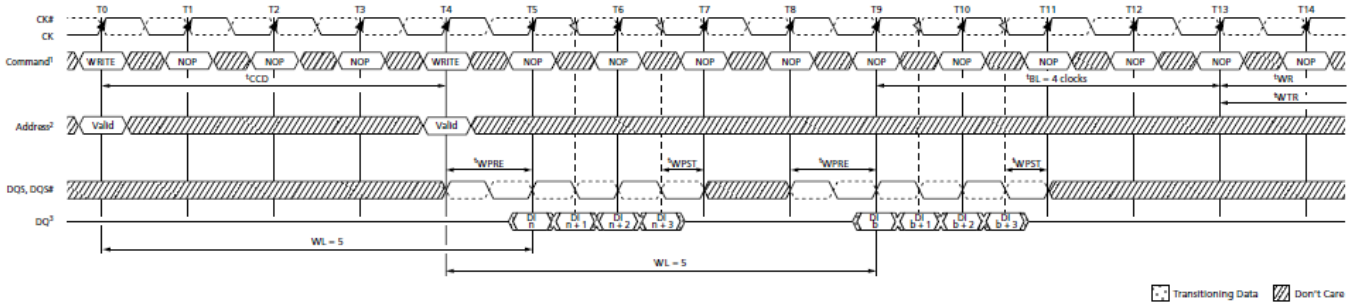


Notes:
1. NOP commands are shown for ease of illustration; other commands may be valid at these times.
2. BC4, WL = 5 (AL = 0, CWL = 5).
3. DI *n* (or *b*) = data-in for column *n* (or column *b*).
4. The BC4 setting is activated by MR0[1:0] = 01 and A12 = 0 during the WRITE command at T0 and T4.
5. If set via MRS (fixed) tWR and tWTR would start T11 (2 cycles earlier).

**Consecutive WRITE (BC4) to WRITE (BC4) via OTF**

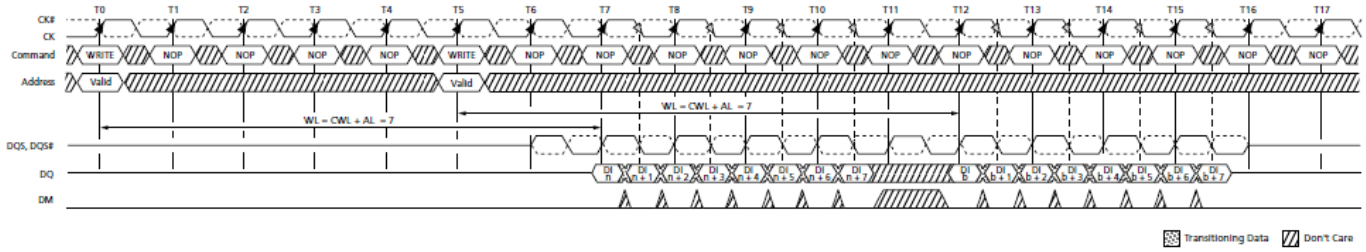


Notes: 1. DI *n* (or *b*) = data-in for column *n* (or column *b*).
2. Seven subsequent elements of data-in are applied in the programmed order following DO *n*.
3. Each WRITE command may be to any bank.
4. Shown for WL = 7 (CWL = 7, AL = 0).

**Nonconsecutive WRITE to WRITE**

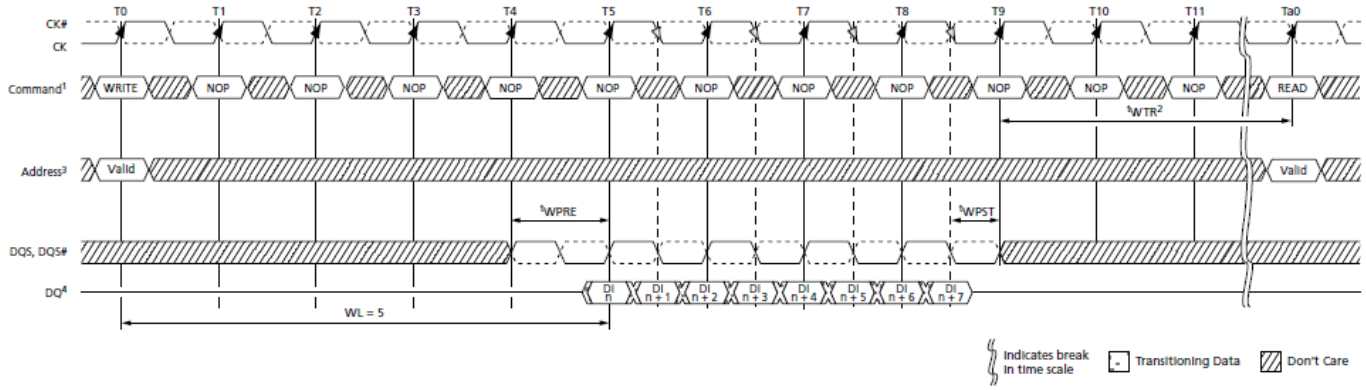


Notes: 1. NOP commands are shown for ease of illustration; other commands may be valid at these times.
2. tWTR controls the WRITE-to-READ delay to the same device and starts with the first rising clock edge after the last write data shown at T9.
3. The BL8 setting is activated by either MR0[1:0] = 00 or MR0[1:0] = 01 and MR0[12] = 1 during the WRITE command at T0. The READ command at Ta0 can be either BC4 or BL8, depending on MR0[1:0] and the A12 status at Ta0.
4. DI *n* = data-in for column *n*.
5. RL = 5 (AL = 0, CL = 5), WL = 5 (AL = 0, CWL = 5).

**WRITE (BL8) to READ (BL8)**

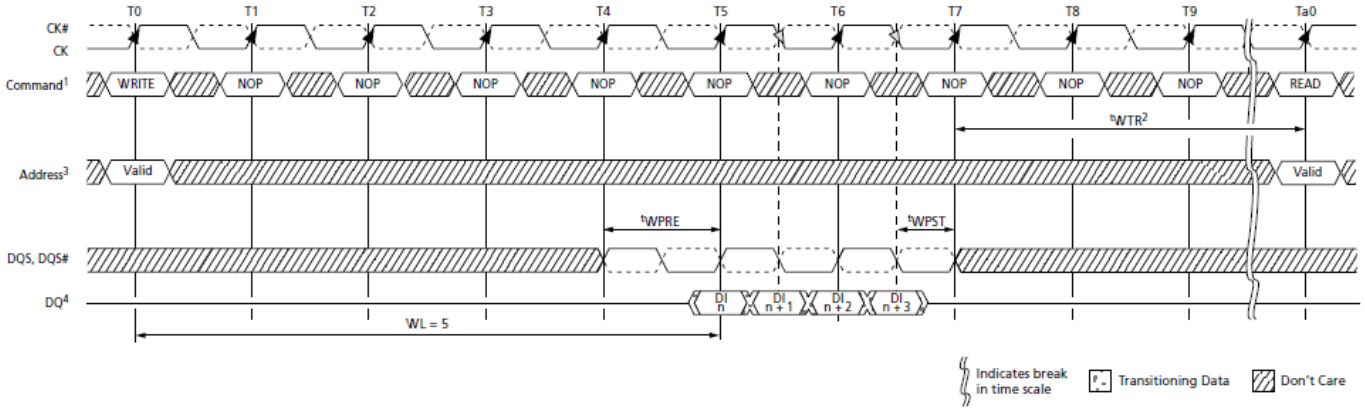


Notes:
1. NOP commands are shown for ease of illustration; other commands may be valid at these times.
2. tWTR controls the WRITE-to-READ delay to the same device and starts with the first rising clock edge after the last write data shown at T7.
3. The fixed BC4 setting is activated by MR0[1:0] = 10 during the WRITE command at T0 and the READ command at Ta0.
4. DI *n* = data-in for column *n*.
5. BC4 (fixed), WL = 5 (AL = 0, CWL = 5), RL = 5 (AL = 0, CL = 5).

**WRITE to READ (BC4 Mode Register Setting)**

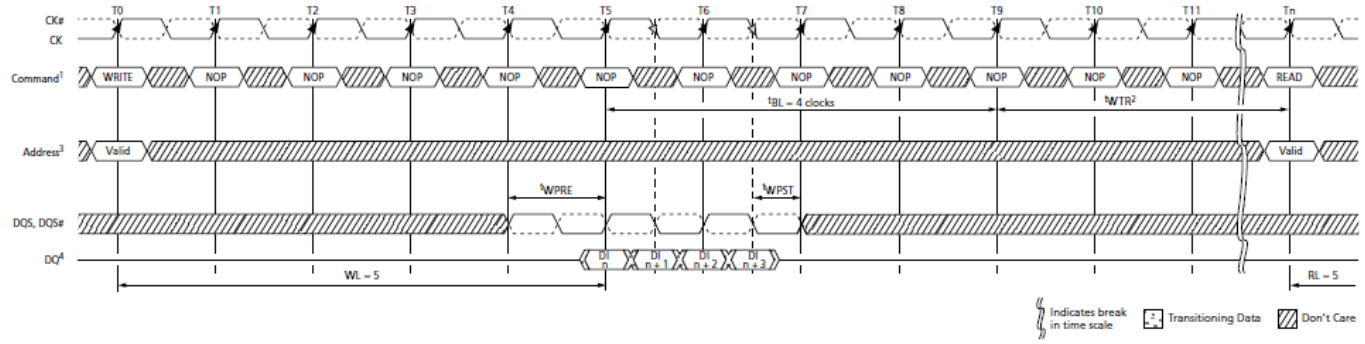


Notes:
1. NOP commands are shown for ease of illustration; other commands may be valid at these times.
2. tWTR controls the WRITE-to-READ delay to the same device and starts after tBL.
3. The BC4 OTF setting is activated by MR0[1:0] = 01 and A12 = 0 during the WRITE command at T0 and the READ command at T*n*.
4. DI *n* = data-in for column *n*.
5. BC4, RL = 5 (AL = 0, CL = 5), WL = 5 (AL = 0, CWL = 5).

**WRITE (BC4 OTF) to READ (BC4 OTF)**

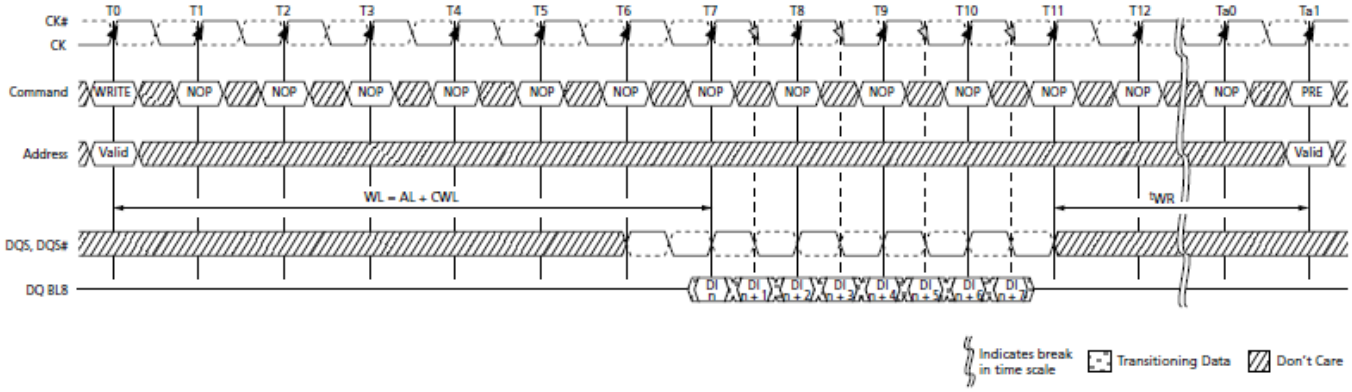


Notes:
1. DI *n* = data-in from column *n*.
2. Seven subsequent elements of data-in are applied in the programmed order following DO *n*.
3. Shown for WL = 7 (AL = 0, CWL = 7).

**WRITE (BL8) to PRECHARGE**

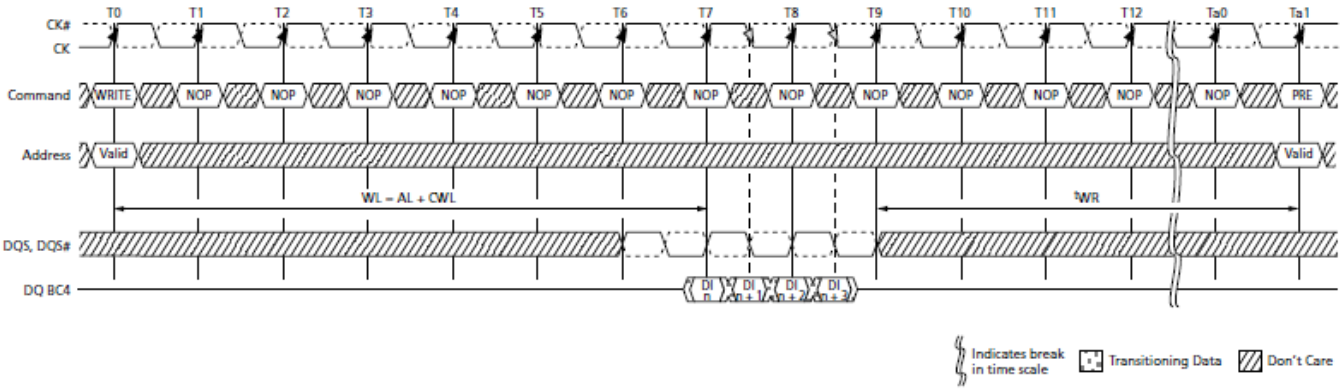


Notes:
1. NOP commands are shown for ease of illustration; other commands may be valid at these times.
2. The write recovery time ($^{t}$WR) is referenced from the first rising clock edge after the last write data is shown at T7. $^{t}$WR specifies the last burst WRITE cycle until the PRECHARGE command can be issued to the same bank.
3. The fixed BC4 setting is activated by MR0[1:0] = 10 during the WRITE command at T0.
4. DI *n* = data-in for column *n*.
5. BC4 (fixed), WL = 5, RL = 5.

**WRITE (BC4 Mode Register Setting) to PRECHARGE**

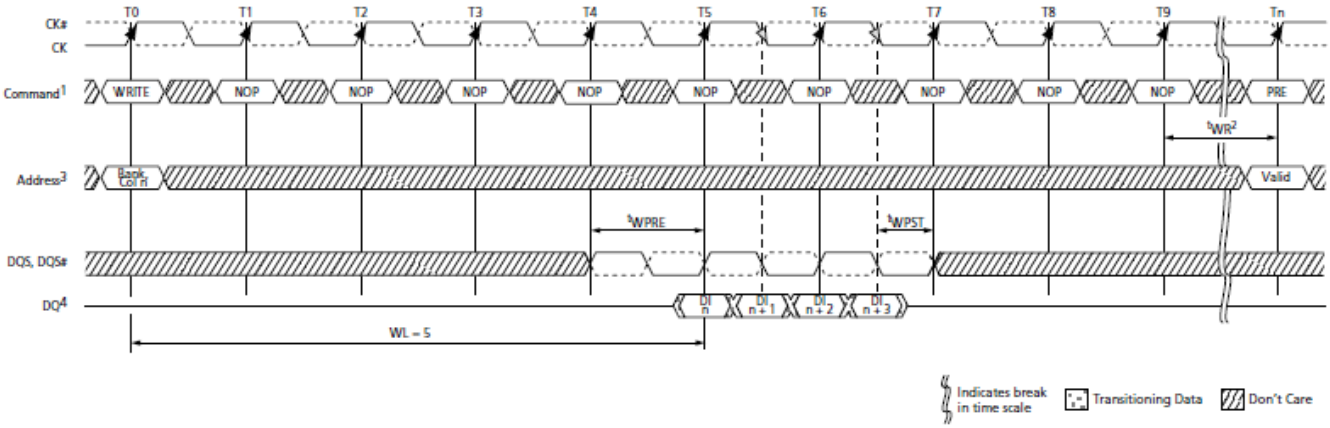


Notes:
1. NOP commands are shown for ease of illustration; other commands may be valid at these times.
2. The write recovery time ($^{t}$WR) is referenced from the rising clock edge at T9. $^{t}$WR specifies the last burst WRITE cycle until the PRECHARGE command can be issued to the same bank.
3. The BC4 setting is activated by MR0[1:0] = 01 and A12 = 0 during the WRITE command at T0.
4. DI *n* = data-in for column *n*.
5. BC4 (OTF), WL = 5, RL = 5.

**WRITE (BC4 OTF) to PRECHARGE**

## DQ Input Timing

WRITE Burst figure shows the strobe-to-clock timing during a WRITE burst. DQS,DQS# must transition within 0.25tCK of the clock transitions, as limited by $^{t}$DQSS. All data and data mask setup and hold timings are measured relative to the DQS, DQS# crossing, not the clock crossing.

The WRITE preamble and postamble are also shown in WRITE Burst figure. One clock prior to data input to the DRAM, DQS must be HIGH and DQS# must be LOW. Then for a half clock, DQS is driven LOW (DQS# is driven HIGH) during the WRITE preamble,$^{t}$WPRE. Likewise, DQS must be kept LOW by the controller after the last data is written to the DRAM during the WRITE postamble, $^{t}$WPST.

Data setup and hold times are also shown in WRITE Burst figure. All setup and hold times are measured from the crossing points of DQS and DQS#. These setup and hold values pertain to data input and data mask input.

Additionally, the half period of the data input strobe is specified by $^{t}$DQSH and $^{t}$DQSL.

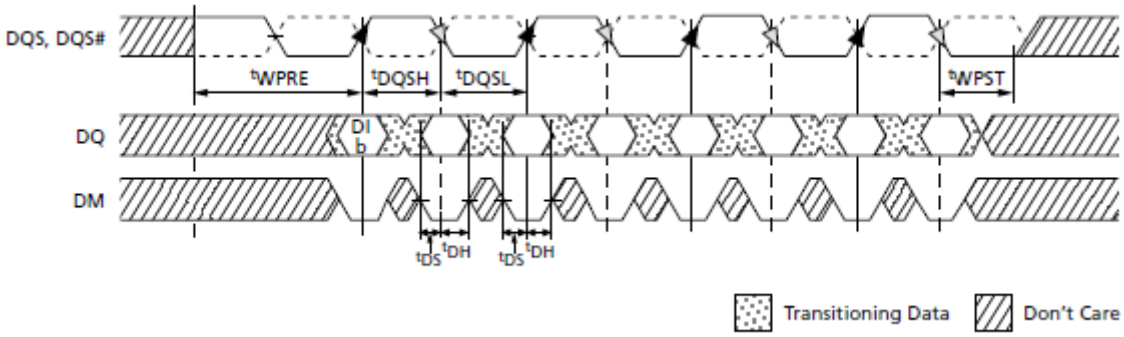


**Data Input Timing**

## PRECHARGE Operation

Input A10 determines whether one bank or all banks are to be precharged and, in the case where only one bank is to be precharged, inputs BA[2:0] select the bank.

When all banks are to be precharged, inputs BA[2:0] are treated as “Don’t Care.” After a bank is precharged, it is in the idle state and must be activated prior to any READ or WRITE commands being issued.

## SELF REFRESH Operation

The SELF REFRESH operation is initiated like a REFRESH command except CKE is LOW.

The DLL is automatically disabled upon entering SELF REFRESH and is automatically enabled and reset upon exiting SELF REFRESH.

All power supply inputs (including $V_{REFCA}$ and $V_{REFDQ}$) must be maintained at valid levels upon entry/exit and during self refresh mode operation. $V_{REFDQ}$ may float or not drive $V_{DDQ}/2$ while in self refresh mode under certain conditions:

- $V_{SS} < V_{REFDQ} < V_{DD}$ is maintained.
- $V_{REFDQ}$ is valid and stable prior to CKE going back HIGH.
- The first WRITE operation may not occur earlier than 512 clocks after $V_{REFDQ}$ is valid.
- All other self refresh mode exit timing requirements are met.

The DRAM must be idle with all banks in the precharge state ($^{t}$RP is satisfied and no bursts are in progress) before a self refresh entry command can be issued. ODT must also be turned off before self refresh entry by registering the ODT ball LOW prior to the self refresh entry command (see On-Die Termination (ODT) ( for timing requirements).

If $R_{TT}$,nom and $R_{TT(WR)}$ are disabled in the mode registers, ODT can be a “Don’t Care.”

After the self refresh entry command is registered, CKE must be held LOW to keep the DRAM in self refresh mode.

After the DRAM has entered self refresh mode, all external control signals, except CKE and RESET#, are “Don’t Care.” The DRAM initiates a minimum of one REFRESH command internally within the $^{t}$CKE period when it enters self refresh mode.

The requirements for entering and exiting self refresh mode depend on the state of the clock during self refresh mode. First and foremost, the clock must be stable (meeting $^{t}$CK specifications) when self refresh mode is entered. If the clock remains stable and the frequency is not altered while in self refresh mode, then the DRAM is allowed to exit self refresh mode after $^{t}$CKESR is satisfied (CKE is allowed to transition HIGH tCKESR later than when CKE was registered LOW). Since the clock remains stable in self refresh mode (no frequency change), $^{t}$CKSRE and $^{t}$CKSRX are not required. However, if the clock is altered during self refresh mode (if it is turned-off or its frequency changes),then $^{t}$CKSRE and $^{t}$CKSRX must be satisfied. When entering self refresh mode, $^{t}$CKSRE must be satisfied prior to altering the clock's frequency. Prior to exiting self refresh mode, $^{t}$CKSRX must be satisfied prior to registering CKE HIGH.

When CKE is HIGH during self refresh exit, NOP or DES must be issued for $^{t}$XS time. $^{t}$XS is required for the completion of any internal refresh already in progress and must be satisfied before a valid command not requiring a locked DLL can be issued to the device. $^{t}$XS is also the earliest time self refresh re-entry may occur. Before a command requiring a locked DLL can be applied, a ZQCL command must be issued, $^{t}$ZQOPER timing must be met, and $^{t}$XSDLL must be satisfied. ODT must be off during $^{t}$XSDLL.

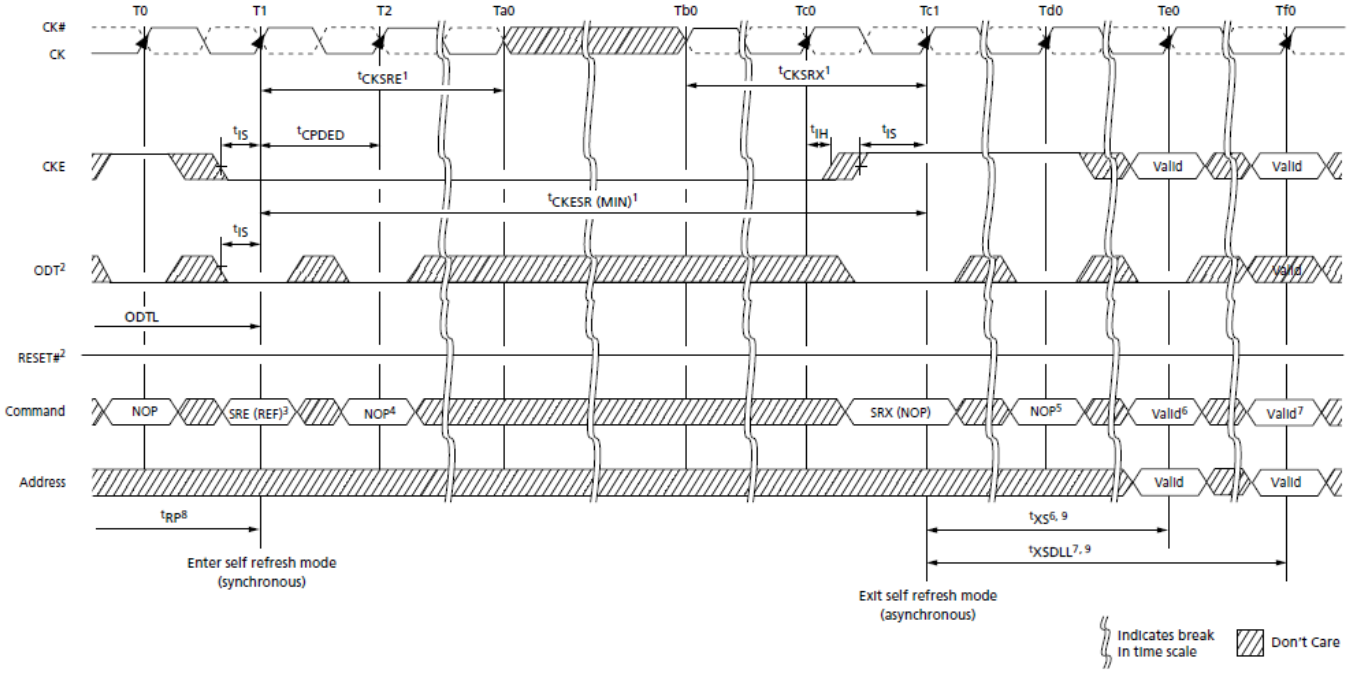


**Self Refresh Entry/Exit Timing**

**Note:**

1. The clock must be valid and stable, meeting $^{t}$CK specifications at least $^{t}$CKSRE after entering self refresh mode, and at least $^{t}$CKSRX prior to exiting self refresh mode, if the clock is stopped or altered between states Ta0 and Tb0. If the clock remains valid and unchanged from entry and during self refresh mode, then $^{t}$CKSRE and $^{t}$CKSRX do not apply; however, $^{t}$CKESR must be satisfied prior to exiting at SRX.
2. ODT must be disabled and $R_{TT}$ off prior to entering self refresh at state T1. If both $R_{TT,nom}$ and $R_{TT(WR)}$ are disabled in the mode registers, ODT can be a "Don't Care."
3. Self refresh entry (SRE) is synchronous via a REFRESH command with CKE LOW.
4. A NOP or DES command is required at T2 after the SRE command is issued prior to the inputs becoming "Don't Care."
5. NOP or DES commands are required prior to exiting self refresh mode until state Te0.
6. $^{t}$XS is required before any commands not requiring a locked DLL.
7. $^{t}$XSDLL is required before any commands requiring a locked DLL.
8. The device must be in the all banks idle state prior to entering self refresh mode. For example, all banks must be precharged, $^{t}$RP must be met, and no data bursts can be in progress.
9. Self refresh exit is asynchronous; however, $^{t}$XS and $^{t}$XSDLL timings start at the first rising clock edge where CKE HIGH satisfies $^{t}$ISXR at Tc1. $^{t}$CKSRX timing is also measured so that $^{t}$ISXR is satisfied at Tc1.

## Extended Temperature Usage

DDR3(L) SDRAM supports the optional extended temperature range of -40°C to +95°C, $T_C$. Thus, the SRT and ASR options must be used at a minimum. The extended temperature range DRAM must be refreshed externally at 2X (double refresh) anytime the case temperature is above +85°C (in supporting temperature range). The external refreshing requirement is accomplished by reducing the refresh period from 64ms to 32ms. However, self refresh mode requires either ASR or SRT to support the extended temperature. Thus either ASR or SRT must be enabled when $T_C$ is above +85°C or self refresh cannot be used until the case temperature is at or below +85°C.

### Self Refresh Temperature and Auto Self Refresh Description

| Field | MR2 Bits | Description |
|---|---|---|
| **Self Refresh Temperature (SRT)** | | |
| SRT | 7 | If ASR is disabled (MR2[6] = 0), SRT must be programmed to indicate $T_{OPER}$ during self refresh:<br>*MR2[7] = 0: Normal operating temperature range (-40°C to 85°C)<br>*MR2[7] = 1: Extended operating temperature range (-40°C to 95°C)<br>If ASR is enabled (MR2[6] = 1), SRT must be set to 0, even if the extended temperature range is supported<br>*MR2[7] = 0: SRT is disabled |
| **Auto Self Refresh (ASR)** | | |
| ASR | 6 | When ASR is enabled, the DRAM automatically provides SELF REFRESH power management functions, (refresh rate for all supported operating temperature values)<br>MR2[6] = 1: ASR is enabled (M7 must = 0)<br>When ASR is not enabled, the SRT bit must be programmed to indicate $T_{OPER}$ during SELF REFRESH operation<br>MR2[6] = 0: ASR is disabled; must use manual self refresh temperature (SRT) |

### Self Refresh Mode Summary

| MR2[6] (ASR) | MR2[7] (SRT) | SELF REFRESH Operation | Permitted Operating Temperature Range for Self Refresh Mode |
|---|---|---|---|
| 0 | 0 | Self refresh mode is supported in the normal temperature range | Normal (-40°C to 85°C) |
| 0 | 1 | Self refresh mode is supported in normal and extended temperature ranges; When SRT is enabled, it increases self refresh power consumption | Normal and extended (-40°C to 95°C) |
| 1 | 0 | Self refresh mode is supported in normal and extended temperature ranges; Self refresh power consumption may be temperature-dependent. | Normal and extended (-40 ~ 95°C) |
| 1 | 1 | Illegal | |

## Power-Down Mode

Power-down is synchronously entered when CKE is registered LOW coincident with a NOP or DES command. CKE is not allowed to go LOW while an MRS, MPR, ZQCAL, READ, or WRITE operation is in progress. CKE is allowed to go LOW while any of the other legal operations (such as ROW ACTIVATION, PRECHARGE, auto precharge, or REFRESH) are in progress. However, the power-down IDD specifications are not applicable until such operations have completed. Depending on the previous DRAM state and the command issued prior to CKE going LOW, certain timing constraints must be satisfied (as noted in Command to Power-Down Entry Parameters table). Timing diagrams detailing the different power-down mode entry and exits are shown in Active Power-Down Entry and Exit figure through MRS Command to Power-Down Entry figure.

### Command to Power-Down Entry Parameters

| DRAM Status | Last Command Prior to CKE LOW[1] | Parameter (Min) | Parameter Value | Figure |
|---|---|---|---|---|
| Idle or active | ACTIVATE | $^{t}$ACTPDEN | 1$^{t}$CK | ACTIVATE to Power-Down Entry figure |
| Idle or active | PRECHARGE | $^{t}$PRPDEN | 1$^{t}$CK | PRECHARGE to Power-Down Entry figure |
| Active | READ or READAP | $^{t}$RDPDEN | RL + 4$^{t}$CK + 1$^{t}$CK | Power-Down Entry After READ or READ with Auto Precharge (RDAP) figure |
| Active | WRITE: BL8OTF, BL8MRS, BC4OTF | $^{t}$WRPDEN | WL + 4$^{t}$CK + $^{t}$WR/$^{t}$CK | Power-Down Entry After WRITE figure |
| Active | WRITE: BC4MRS | | WL + 2$^{t}$CK + $^{t}$WR/$^{t}$CK | Power-Down Entry After WRITE figure |
| Active | WRITEAP: BL8OTF, BL8MRS, BC4OTF | $^{t}$WRAPDEN | WL + 4$^{t}$CK + WR + 1$^{t}$CK | Power-Down Entry After WRITE with Auto Precharge (WRAP) figure |
| Active | WRITEAP: BC4MRS | | WL + 2$^{t}$CK + WR + 1$^{t}$CK | Power-Down Entry After WRITE with Auto Precharge (WRAP) figure |
| Idle | REFRESH | $^{t}$REFPDEN | 1$^{t}$CK | REFRESH to Power-Down Entry figure |
| Power-down | REFRESH | $^{t}$XPDLL | Greater of 10$^{t}$CK or 24ns | Power-Down Exit to Refresh to Power-Down Entry figure |
| Idle | MODE REGISTER SET | $^{t}$MRSPDEN | $^{t}$MOD | MRS Command to Power-Down Entry figure |

**Note:**

1. If slow-exit mode precharge power-down is enabled and entered, ODT becomes asynchronous $^{t}$ANPD prior to CKE going LOW and remains asynchronous until $^{t}$ANPD + $^{t}$XPDLL after CKE goes HIGH.

Entering power-down disables the input and output buffers, excluding CK, CK#, ODT, CKE, and RESET#. NOP or DES commands are required until $^{t}$CPDED has been satisfied,at which time all specified input/output buffers are disabled. The DLL should be in a locked state when power-down is entered for the fastest power-down exit timing. If the DLL is not locked during power-down entry, the DLL must be reset after exiting power-down mode for proper READ operation as well as synchronous ODT operation.

During power-down entry, if any bank remains open after all in-progress commands are complete, the DRAM will be in active power-down mode. If all banks are closed after all in-progress commands are complete, the DRAM will be in precharge power-down mode. Precharge power-down mode must be programmed to exit with either a slow exit mode or a fast exit mode. When entering precharge power-down mode, the DLL is turned off in slow exit mode or kept on in fast exit mode.

The DLL also remains on when entering active power-down. ODT has special timing constraints when slow exit mode precharge power-down is enabled and entered. Refer to Asynchronous ODT Mode for detailed ODT usage requirements in slow exit mode precharge power-down. A summary of the two power-down modes is listed in Power-Down Modes table.

While in either power-down state, CKE is held LOW, RESET# is held HIGH, and a stable clock signal must be maintained. ODT must be in a valid state but all other input signals are “Don’t Care.” If RESET# goes LOW during power-down, the DRAM will switch out of power-down mode and go into the reset state. After CKE is registered LOW, CKE must remain LOW until $^{t}$PD (MIN) has been satisfied. The maximum time allowed for powerdown duration is $^{t}$PD (MAX) (9 × $^{t}$REFI).

The power-down states are synchronously exited when CKE is registered HIGH (with a required NOP or DES command). CKE must be maintained HIGH until $^{t}$CKE has been satisfied. A valid, executable command may be applied after power-down exit latency,$^{t}$XP, and $^{t}$XPDLL have been satisfied. A summary of the power-down modes is listed below.

For specific CKE-intensive operations, such as repeating a power-down-exit-to-refreshto-power-down-entry sequence, the number of clock cycles between power-down exit and power-down entry may not be sufficient to keep the DLL properly updated. In addition to meeting $^{t}$PD when the REFRESH command is used between power-down exit and power-down entry, two other conditions must be met. First, $^{t}$XP must be satisfied before issuing the REFRESH command. Second, $^{t}$XPDLL must be satisfied before the next power-down may be entered. An example is shown in Power-Down Exit to Refresh to Power-Down Entry figure.

**Power-Down Modes table**

| DRAM State | MR0[12] | DLL State | Power- Down Exit | Relevant Parameters |
|---|---|---|---|---|
| Active (any bank open) | “Don’t Care” | On | Fast | $^{t}$XP to any other valid command |
| Precharged (all banks precharged) | 1 | On | Fast | $^{t}$XP to any other valid command |
| | 0 | Off | Slow | $^{t}$XPDLL to commands that require the DLL to be locked (READ, RDAP, or ODT on);<br>$^{t}$XP to any other valid command |

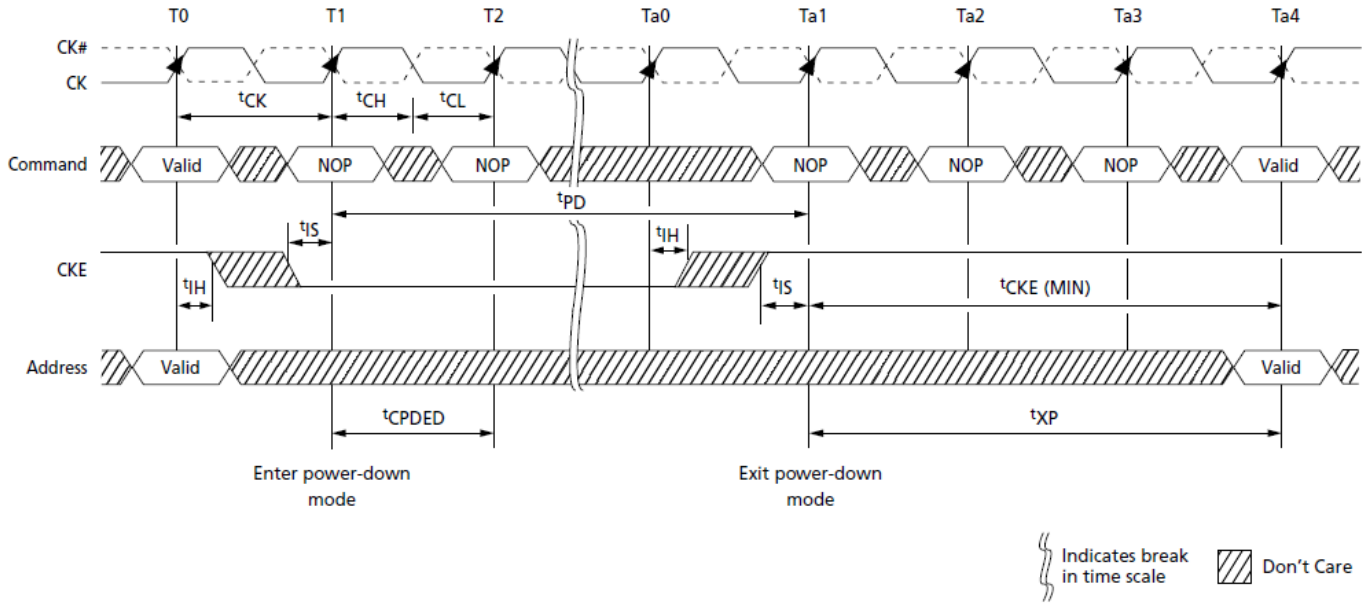


**Active Power-Down Entry and Exit**

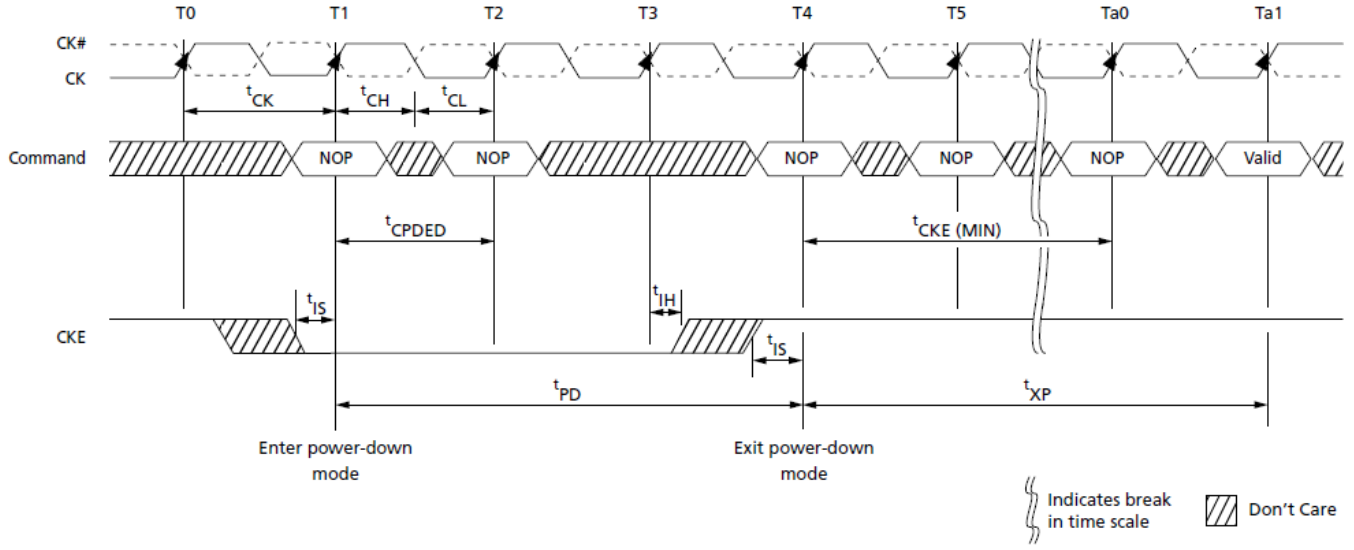


**Precharge Power-Down (Fast-Exit Mode) Entry and Exit**

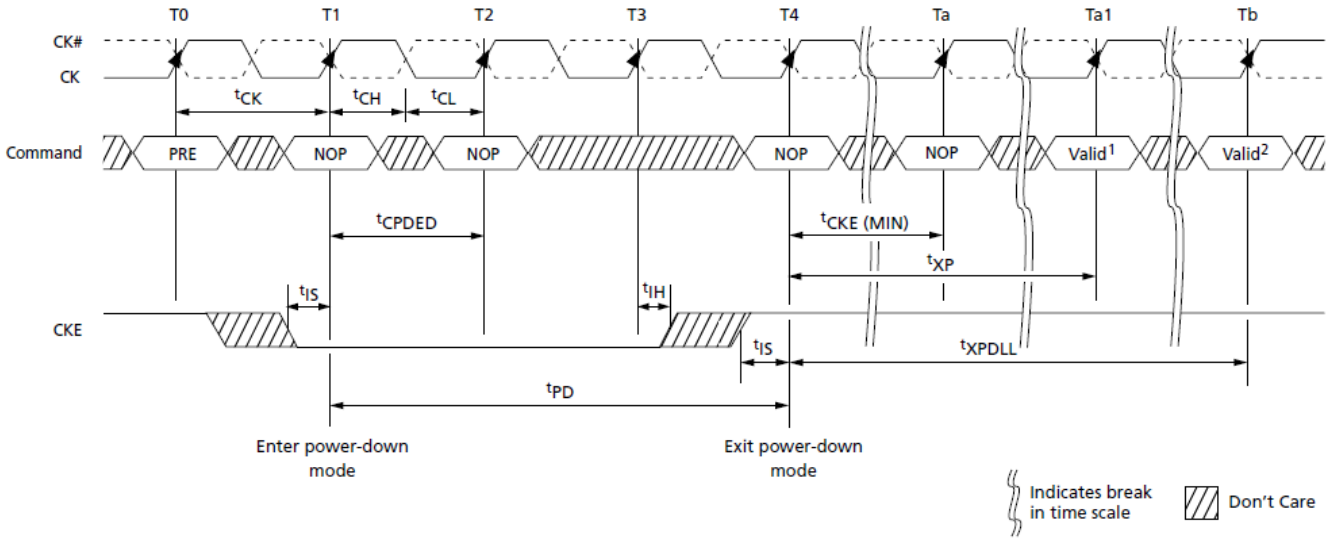


Notes: 1. Any valid command not requiring a locked DLL.
2. Any valid command requiring a locked DLL.

**Precharge Power-Down (Slow-Exit Mode) Entry and Exit**

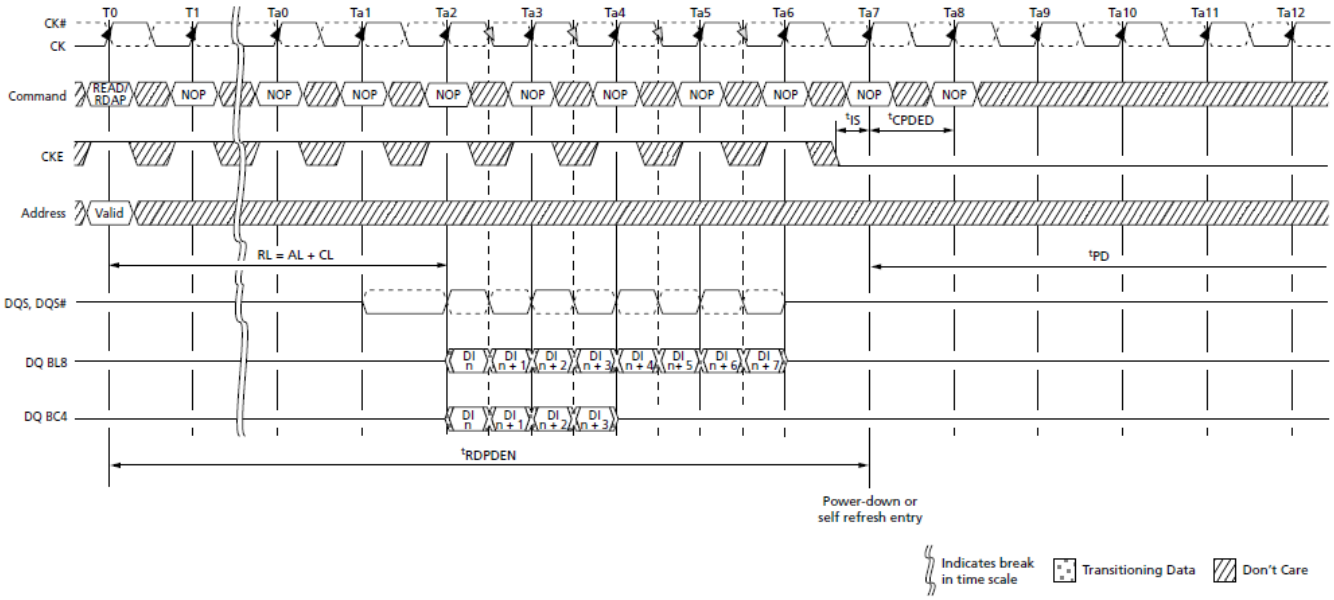


**Power-Down Entry After READ or READ with Auto Precharge (RDAP)**

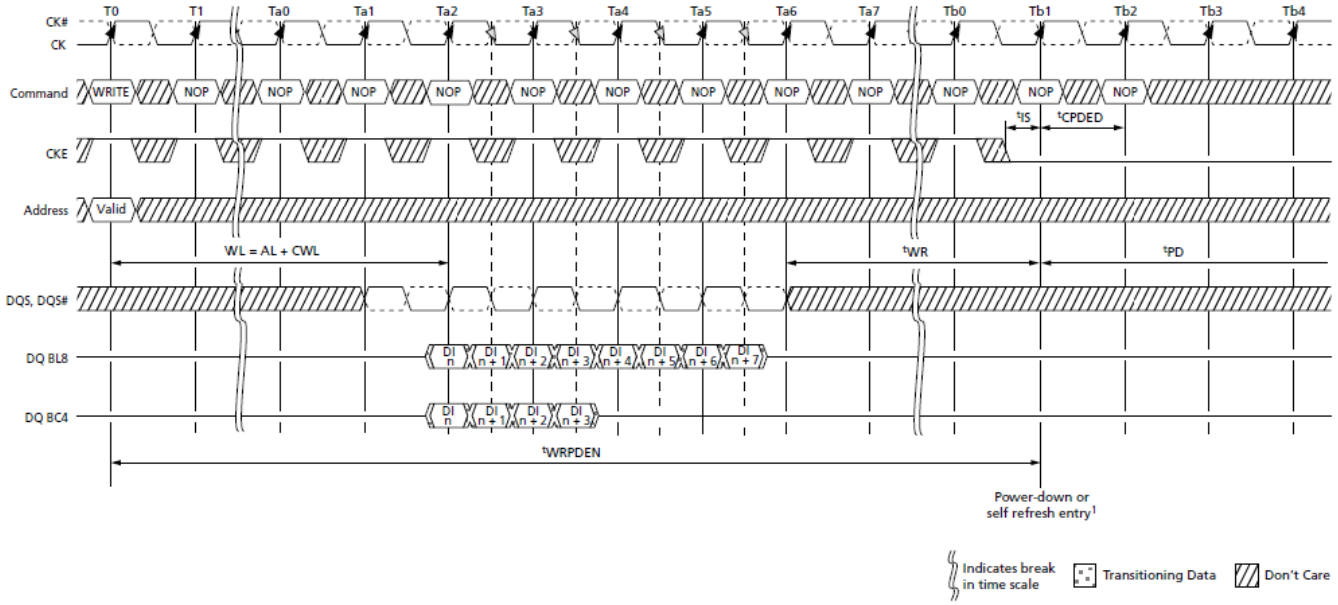


Note: 1. CKE can go LOW 2tCK earlier if BC4MRS.

**Power-Down Entry After WRITE**

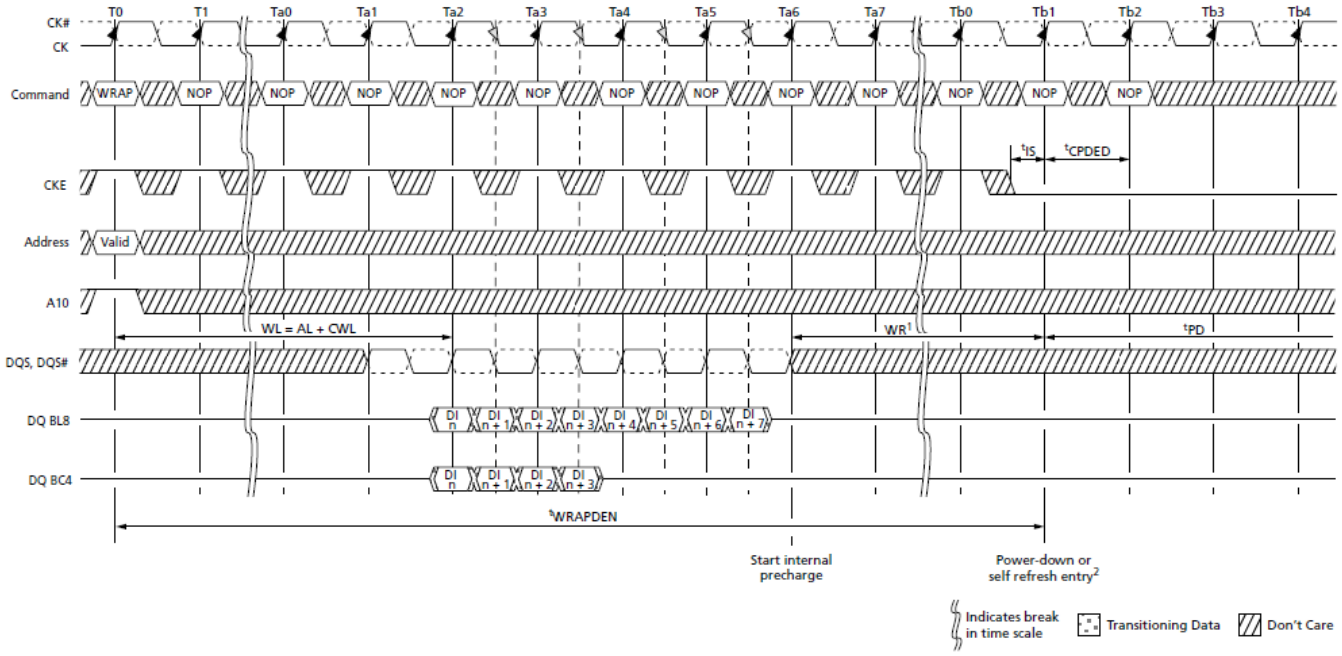


Notes: 1. tWR is programmed through MR0[11:9] and represents tWRmin (ns)/tCK rounded up to the next integer tCK.
2. CKE can go LOW 2tCK earlier if BC4MRS.

**Power-Down Entry After WRITE with Auto Precharge (WRAP)**

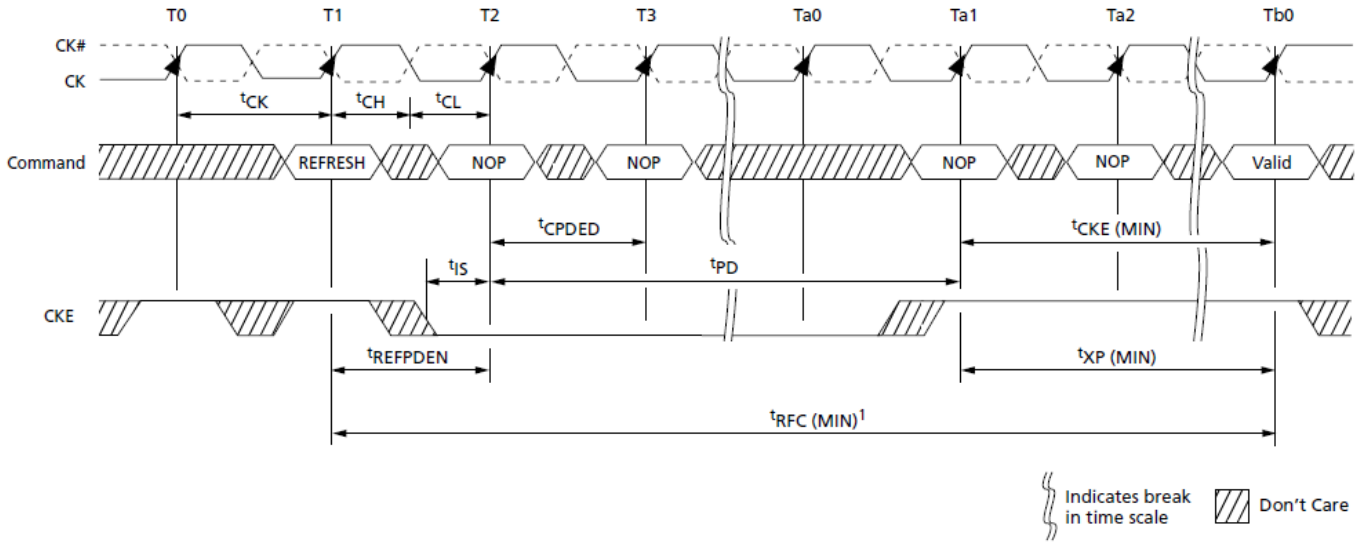


Note: 1. After CKE goes HIGH during tRFC, CKE must remain HIGH until tRFC is satisfied.

**REFRESH to Power-Down Entry**

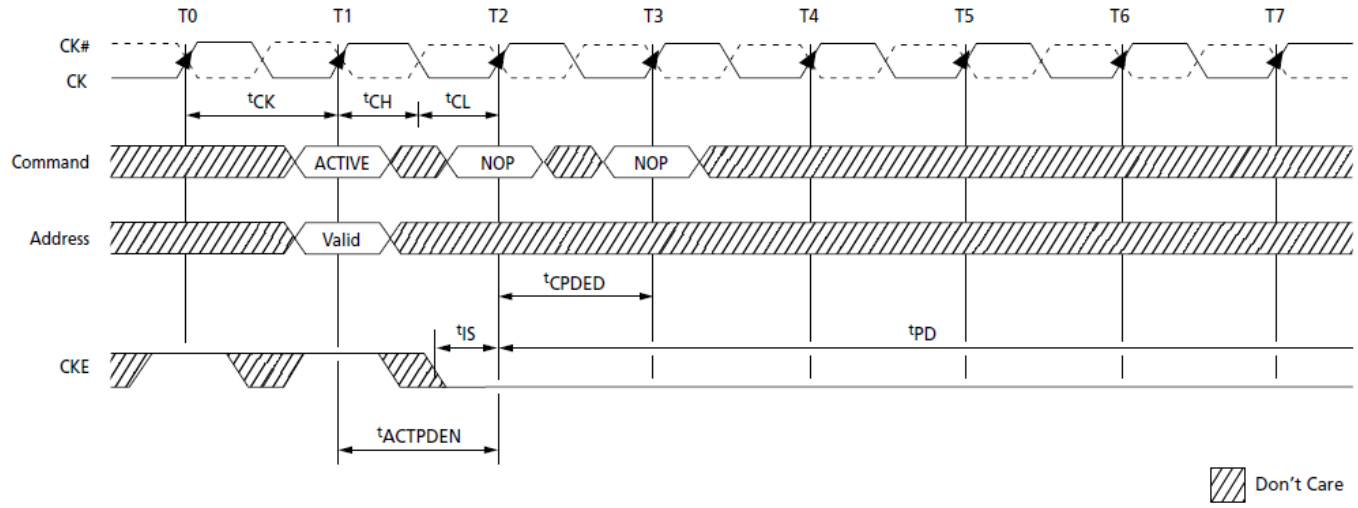


**ACTIVATE to Power-Down Entry**

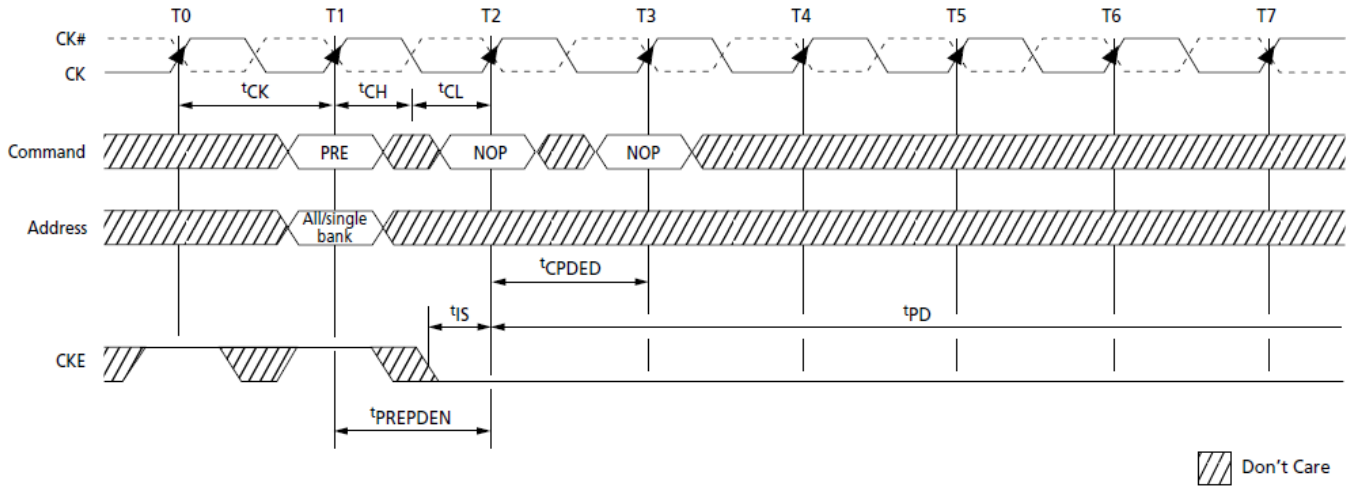


**PRECHARGE to Power-Down Entry**

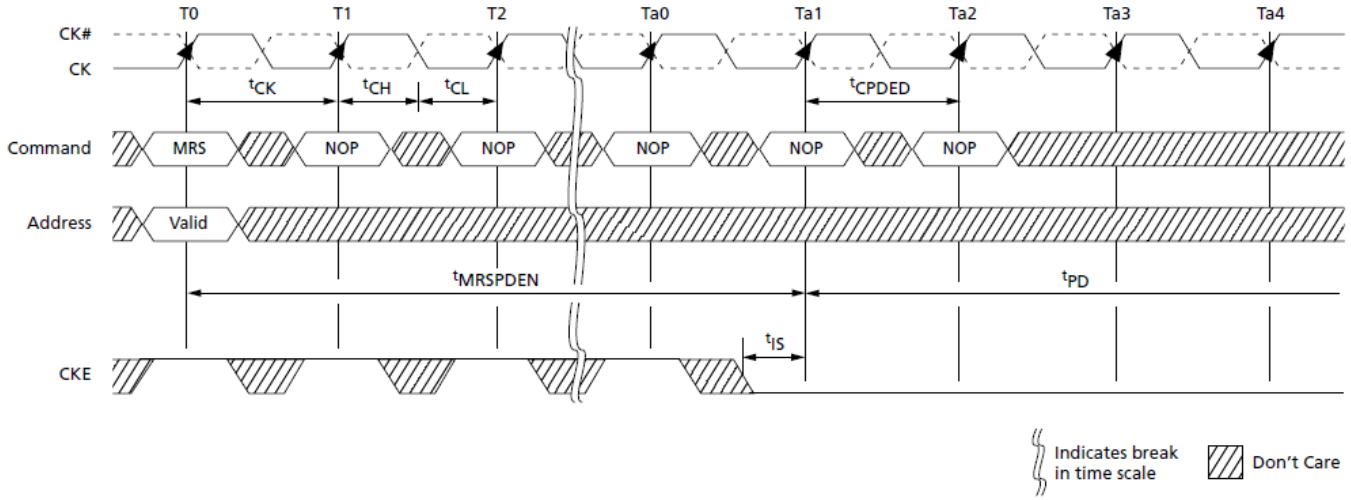


**MRS Command to Power-Down Entry**

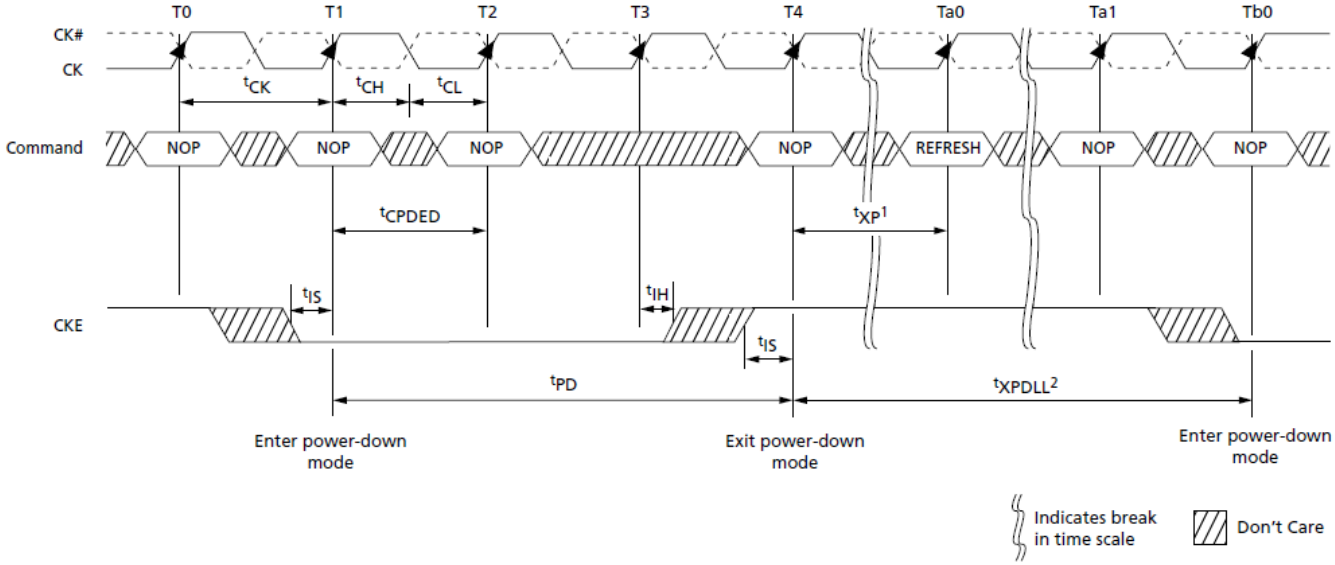


Notes: 1. tXP must be satisfied before issuing the command.
2. tXPDLL must be satisfied (referenced to the registration of power-down exit) before the next power-down can be entered.

**Power-Down Exit to Refresh to Power-Down Entry**

## RESET Operation

The RESET signal (RESET#) is an asynchronous reset signal that triggers any time it drops LOW, and there are no restrictions about when it can go LOW. After RESET# goes LOW, it must remain LOW for 100ns. During this time, the outputs are disabled, ODT (RTT) turns off (High-Z), and the DRAM resets itself. CKE should be driven LOW prior to RESET# being driven HIGH. After RESET# goes HIGH, the DRAM must be re-initialized

as though a normal power-up was executed. All counters, except refresh counters, on the DRAM are reset, and data stored in the DRAM is assumed unknown after RESET# has gone LOW.

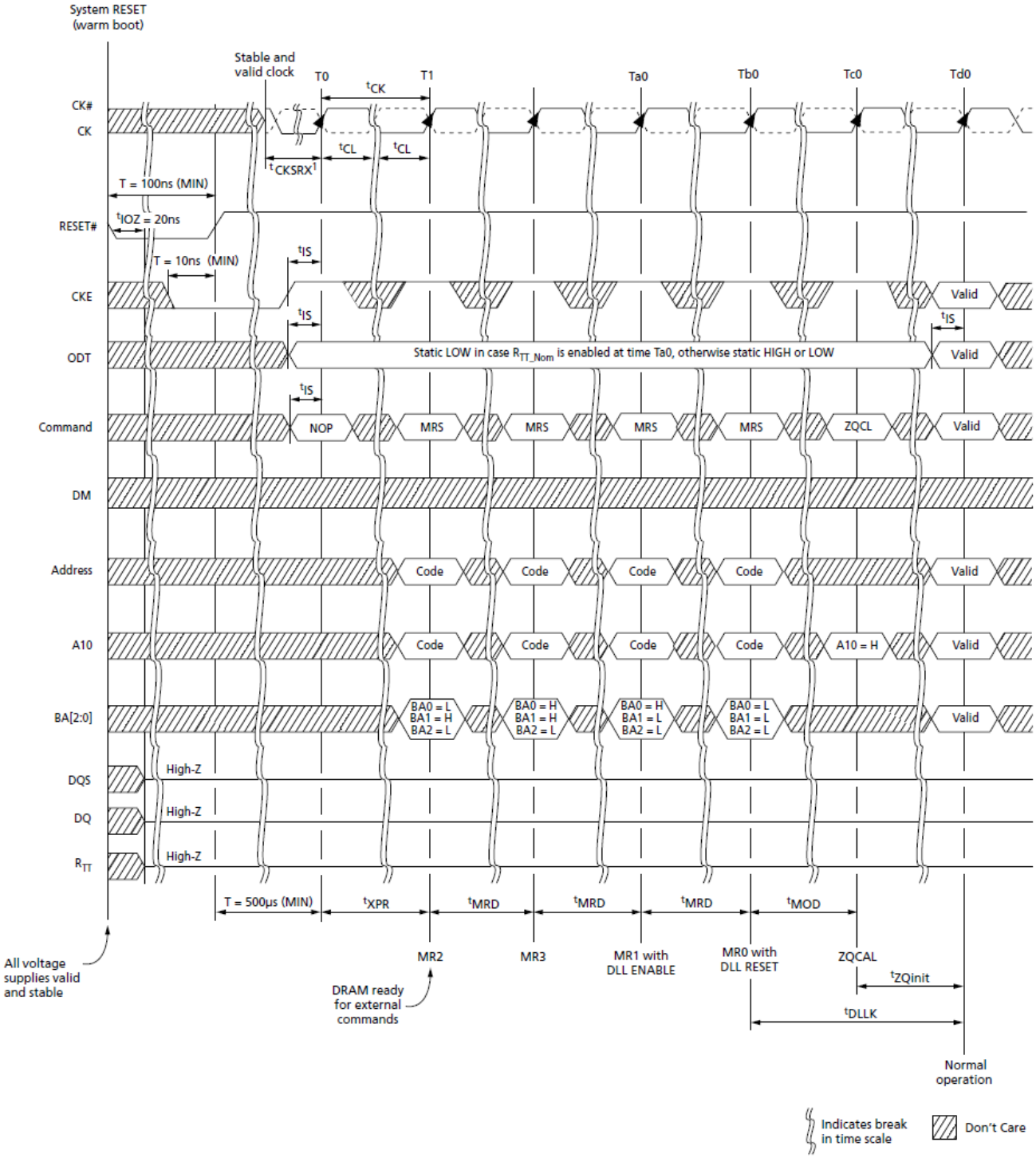


Note: 1. The minimum time required is the longer of 10ns or 5 clocks.

**RESET Sequence**

## On-Die Termination (ODT)

On-die termination (ODT) is a feature that enables the DRAM to enable/disable and turn on/off termination resistance for each DQ, UDQS, UDQS#, LDQS, LDQS#, UDM, and LDM signal for the x16 configuration.

ODT is designed to improve signal integrity of the memory channel by enabling the DRAM controller to independently turn on/off the DRAM's internal termination resistance for any grouping of DRAM devices. ODT is not supported during DLL disable mode (simple functional representation shown below). The switch is enabled by the internal ODT control logic, which uses the external ODT ball and other control information.

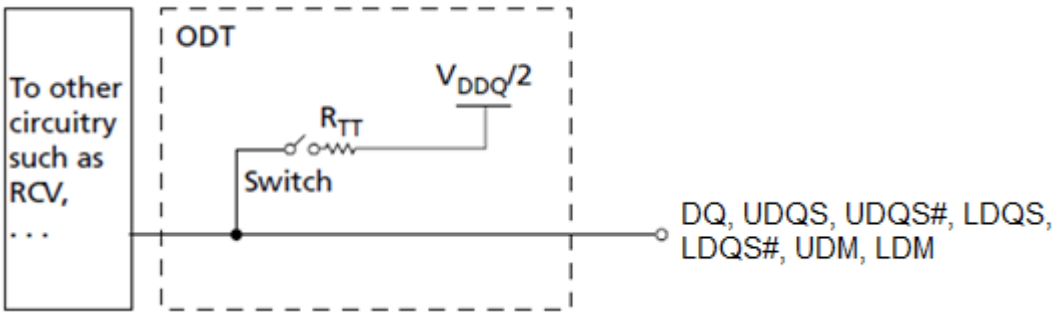


**On-Die Termination**

## Functional Representation of ODT

The value of $R_{TT}$ (ODT termination resistance value) is determined by the settings of several mode register bits (see Mode Registers for $R_{TT(WR)}$ table). The ODT ball is ignored while in self refresh mode (must be turned off prior to self refresh entry) or if mode registers MR1 and MR2 are programmed to disable ODT. ODT is comprised of nominal ODT and dynamic ODT modes and either of these can function in synchronous or asynchronous mode (when the DLL is off during precharge power-down or when the DLL is synchronizing). Nominal ODT is the base termination and is used in any allowable ODT state. Dynamic ODT is applied only during writes and provides OTF switching from no $R_{TT}$ or $R_{TT,nom}$ to $R_{TT(WR)}$.

The actual effective termination, $R_{TT(EFF)}$, may be different from $R_{TT}$ targeted due to nonlinearity of the termination. For $R_{TT(EFF)}$ values and calculations, see $R_{TT}$ Effective Impedance table.

## Nominal ODT

ODT (NOM) is the base termination resistance for each applicable ball; it is enabled or disabled via MR1[9, 6, 2] (see Mode Register 1 (MR1) Definition), and it is turned on or off via the ODT ball.

## Truth Table – ODT (Nominal)

Note 1 applies to the entire table

| MR1[9, 6, 2] | ODT Pin | DRAM Termination State | DRAM State | Notes |
|---|---|---|---|---|
| 000 | 0 | $R_{TT,nom}$ disabled, ODT off | Any valid | 2 |
| 000 | 1 | $R_{TT,nom}$ disabled, ODT on | Any valid except self refresh, read | 3 |
| 000–101 | 0 | $R_{TT,nom}$ enabled, ODT off | Any valid | 2 |
| 000–101 | 1 | $R_{TT,nom}$ enabled, ODT on | Any valid except self refresh, read | 3 |
| 110 and 111 | X | $R_{TT,nom}$ reserved, ODT on or off | Illegal | |

**Note:**

1. Assumes dynamic ODT is disabled (see Dynamic ODT when enabled).
2. ODT is enabled and active during most writes for proper termination, but it is not illegal for it to be off during writes.
3. ODT must be disabled during reads. The $R_{TT,nom}$ value is restricted during writes. Dynamic ODT is applicable if enabled.

Nominal ODT resistance $R_{TT,nom}$ is defined by MR1[9, 6, 2], as shown in Mode Register 1 (MR1) Definition. The $R_{TT,nom}$ termination value applies to the output pins previously mentioned. DDR3 SDRAM supports multiple $R_{TT,nom}$ values based on RZQ/n where n can be 2, 4, 6, 8, or 12 and RZQ is 240Ω. $R_{TT,nom}$ termination is allowed any time after the DRAM is initialized, calibrated, and not performing read access, or when it is not in self refresh mode.

Write accesses use $R_{TT,nom}$ if dynamic ODT ($R_{TT(WR)}$) is disabled. If $R_{TT,nom}$ is used during writes, only RZQ/2, RZQ/4, and RZQ/6 are allowed (see Mode Registers for $R_{TT,nom}$ table). ODT timings are summarized in ODT Parameters table, as well as listed in the Electrical Characteristics and AC Operating Conditions table.

Examples of nominal ODT timing are shown in conjunction with the synchronous mode of operation in Synchronous ODT Mode.

### ODT Parameters

| Symbol | Description | Begins at | Defined to | Definition for All DDR3L Speed Bins | Unit |
|---|---|---|---|---|---|
| ODTLon | ODT synchronous turn-on delay | ODT registered HIGH | $R_{TT(ON)}$ $\pm^{t}$AON | CWL + AL - 2 | $^{t}$CK |
| ODTLoff | ODT synchronous turn-off delay | ODT registered HIGH | $R_{TT(OFF)}$ $\pm^{t}$AOF | CWL + AL - 2 | $^{t}$CK |
| $^{t}$AONPD | ODT asynchronous turn-on delay | ODT registered HIGH | $R_{TT(ON)}$ | 2–8.5 | ns |
| $^{t}$AOFPD | ODT asynchronous turn-off delay | ODT registered HIGH | $R_{TT(OFF)}$ | 2–8.5 | ns |
| ODTH4 | ODT minimum HIGH time after ODT assertion or write (BC4) | ODT registered HIGH or write registration with ODT HIGH | ODT registered LOW | 4$^{t}$CK | $^{t}$CK |
| ODTH8 | ODT minimum HIGH time after write (BL8) | Write registration with ODT HIGH | ODT registered LOW | 6$^{t}$CK | $^{t}$CK |
| $^{t}$AON | ODT turn-on relative to ODTLon completion | Completion of ODTLon | $R_{TT(ON)}$ | See Electrical Characteristics and AC Operating Conditions table | ps |
| $^{t}$AOF | ODT turn-off relative to ODTLoff completion | Completion of ODTLoff | $R_{TT(OFF)}$ | 0.5$^{t}$CK ± 0.2$^{t}$CK | tCK |

## Dynamic ODT

In certain application cases, and to further enhance signal integrity on the data bus, it is desirable that the termination strength of the DDR3 SDRAM can be changed without issuing an MRS command, essentially changing the ODT termination on the fly. With dynamic ODT $R_{TT(WR)}$) enabled, the DRAM switches from nominal ODT $R_{TT,nom}$) to dynamic ODT $R_{TT(WR)}$) when beginning a WRITE burst and subsequently switches back to nominal ODT $R_{TT,nom}$) at the completion of the WRITE burst. This requirement is supported by the dynamic ODT feature, as described below.

### Dynamic ODT Special Use Case

When DDR3 devices are architect as a single rank memory array, dynamic ODT offers a special use case: the ODT ball can be wired high (via a current limiting resistor preferred) by having $R_{TT,nom}$ disabled via MR1 and $R_{TT(WR)}$ enabled via MR2. This will allow the ODT signal not to have to be routed yet the DRAM can provide ODT coverage during write accesses.

When enabling this special use case, some standard ODT spec conditions may be violated: ODT is sometimes suppose to be held low. Such ODT spec violation (ODT not LOW) is allowed under this special use case. Most notably, if Write Leveling is used, this would appear to be a problem since $R_{TT(WR)}$ can not be used (should be disabled) and $R_{TT(NOM)}$ should be used. For Write leveling during this special use case, with the DLL

locked, then $R_{TT(NOM)}$ maybe enabled when entering Write Leveling mode and disabled when exiting Write Leveling mode. More so, $R_{TT(NOM)}$ must be enabled when enabling Write Leveling, via same MR1 load, and disabled when disabling Write Leveling, via same MR1 load if RTT(NOM) is to be used.

ODT will turn-on within a delay of ODTLon + $^{t}$AON + $^{t}$MOD + 1CK (enabling via MR1) or turn-off within a delay of ODTLoff + $^{t}$AOF + $^{t}$MOD + 1CK. As seen in the table below,between the Load Mode of MR1 and the previously specified delay, the value of ODT is uncertain. this means the DQ ODT termination could turn-on and then turn-off again during the period of stated uncertainty.

### Write Leveling with Dynamic ODT Special Case

| Begin $R_{TT,nom}$ Uncertainty | End $R_{TT,nom}$ Uncertainty | I/Os | $R_{TT,nom}$ Final State |
|---|---|---|---|
| MR1 load mode command: Enable Write Leveling and $R_{TT(NOM)}$ | ODTLon + $^{t}$AON + $^{t}$MOD + 1CK | DQS, DQS# | Drive $R_{TT,nom}$ value |
| | | DQs | No $R_{TT,nom}$ |
| MR1 load mode command: Disable Write Leveling and $R_{TT(NOM)}$ | ODTLoff + $^{t}$AOFF + $^{t}$MOD + 1CK | DQS, DQS# | No $R_{TT,nom}$ |
| | | DQs | No $R_{TT,nom}$ |

## Functional Description

The dynamic ODT mode is enabled if either MR2[9] or MR2[10] is set to 1. Dynamic ODT is not supported during DLL disable mode so $R_{TT(WR)}$ must be disabled. The dynamic ODT function is described below:

- Two $R_{TT}$ values are available—$R_{TT,nom}$ and $R_{TT(WR)}$.
  – The value for $R_{TT,nom}$ is preselected via MR1[9, 6, 2].
  – The value for $R_{TT(WR)}$ is preselected via MR2[10, 9].
- During DRAM operation without READ or WRITE commands, the termination is controlled.
  – Nominal termination strength $R_{TT,nom}$ is used.
  – Termination on/off timing is controlled via the ODT ball and latencies ODTLon and ODTLoff.
- When a WRITE command (WR, WRAP, WRS4, WRS8, WRAPS4, WRAPS8) is registered, and if dynamic ODT is enabled, the ODT termination is controlled.
  – A latency of ODTLcnw after the WRITE command: termination strength $R_{TT,nom}$ switches to $R_{TT(WR)}$
  – A latency of ODTLcwn8 (for BL8, fixed or OTF) or ODTLcwn4 (for BC4, fixed or OTF) after the WRITE command: termination strength $R_{TT(WR)}$ switches back to RTT,nom.
  – On/off termination timing is controlled via the ODT ball and determined by ODTLon, ODTLoff, ODTH4, and ODTH8.
  – During the $^{t}$ADC transition window, the value of $R_{TT}$ is undefined.

ODT is constrained during writes and when dynamic ODT is enabled (see the table below, Dynamic ODT Specific Parameters). ODT timings listed in the ODT Parameters table in On-Die Termination (ODT) also apply to dynamic ODT mode.

### Dynamic ODT Specific Parameters

| Symbol | Description | Begins at | Defined to | Definition for All DDR3L Speed Bins | Unit |
|---|---|---|---|---|---|
| ODTLcnw | Change from $R_{TT,nom}$ to $R_{TT(WR)}$ | Write registration | $R_{TT}$ switched from $R_{TT,nom}$ to $R_{TT(WR)}$ | WL - 2 | $^{t}$CK |
| ODTLcwn4 | Change from $R_{TT(WR)}$ to $R_{TT,nom}$ (BC4) | Write registration | $R_{TT}$ switched from $R_{TT(WR)}$ to $R_{TT,nom}$ | 4$^{t}$CK + ODTL off | $^{t}$CK |
| ODTLcwn8 | Change from $R_{TT(WR)}$ to $R_{TT,nom}$ (BL8) | Write registration | $R_{TT}$ switched from $R_{TT(WR)}$ to $R_{TT,nom}$ | 6$^{t}$CK + ODTL off | $^{t}$CK |
| $^{t}$ADC | $R_{TT}$ change skew | ODTLcnw completed | $R_{TT}$ transition complete | 0.5$^{t}$CK ± 0.2$^{t}$CK | $^{t}$CK |

### Mode Registers for $R_{TT,nom}$

| MR1 ($R_{TT,nom}$) | | | $R_{TT,nom}$ (RZQ) | $R_{TT,nom}$ (Ohm) | $R_{TT,nom}$ Mode Restriction |
|---|---|---|---|---|---|
| M9 | M6 | M2 | | | |
| 0 | 0 | 0 | Off | Off | n/a |
| 0 | 0 | 1 | RZQ/4 | 60 | Self refresh |
| 0 | 1 | 0 | RZQ/2 | 120 | |
| 0 | 1 | 1 | RZQ/6 | 40 | |
| 1 | 0 | 0 | RZQ/12 | 20 | Self refresh, write |
| 1 | 0 | 1 | RZQ/8 | 30 | |
| 1 | 1 | 0 | Reserved | Reserved | n/a |
| 1 | 1 | 1 | Reserved | Reserved | n/a |

**Note:** 1. RZQ = 240Ω. If $R_{TT,nom}$ is used during WRITEs, only RZQ/2, RZQ/4, RZQ/6 are allowed.

**Mode Registers for $R_{TT(WR)}$**

| MR2 ($R_{TT(WR)}$) | | $R_{TT(WR)}$ (RZQ) | $R_{TT(WR)}$ (Ohm) |
|---|---|---|---|
| M10 | M9 | | |
| 0 | 0 | Dynamic ODT off: WRITE does not affect $R_{TT,nom}$ | |
| 0 | 1 | RZQ/4 | 60 |
| 1 | 0 | RZQ/2 | 120 |
| 1 | 1 | Reserved | Reserved |

**Timing Diagrams for Dynamic ODT**

| Figure Title |
|---|
| Dynamic ODT: ODT Asserted Before and After the WRITE, BC4 |
| Dynamic ODT: Without WRITE Command |
| Dynamic ODT: ODT Pin Asserted Together with WRITE Command for 6 Clock Cycles, BL8 |
| Dynamic ODT: ODT Pin Asserted with WRITE Command for 6 Clock Cycles, BC4 |
| Dynamic ODT: ODT Pin Asserted with WRITE Command for 4 Clock Cycles, BC4 |

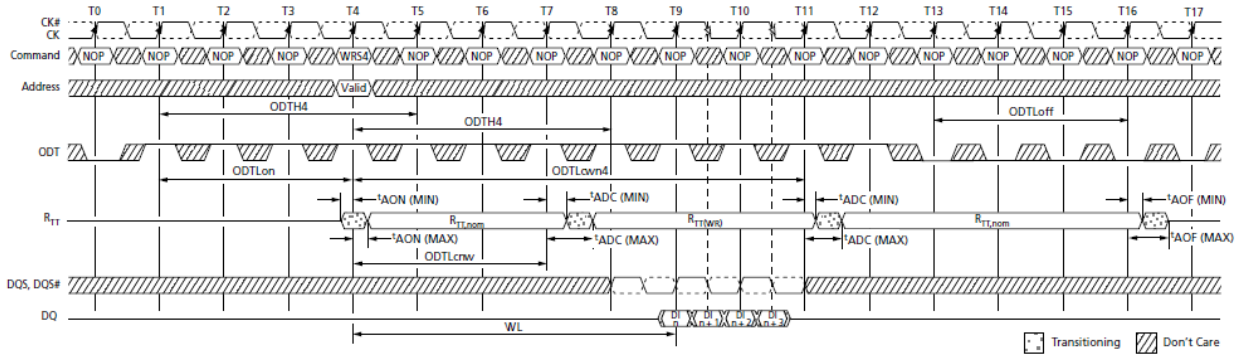


Notes: 1. Via MRS or OTF. AL = 0, CWL = 5. $R_{TT,nom}$ and $R_{TT(WR)}$ are enabled.
2. ODTH4 applies to first registering ODT HIGH and then to the registration of the WRITE command. In this example, ODTH4 is satisfied if ODT goes LOW at T8 (four clocks after the WRITE command).

**Dynamic ODT: ODT Asserted Before and After the WRITE, BC4**

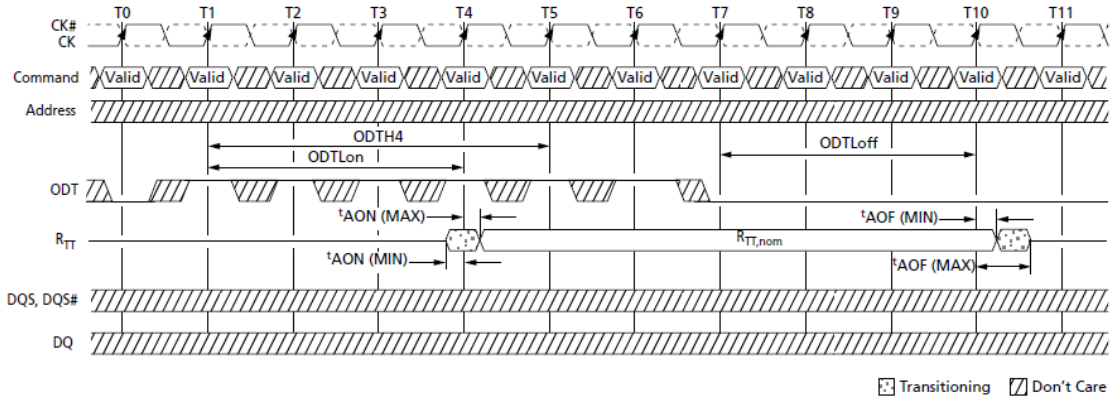


Notes: 1. AL = 0, CWL = 5. $R_{TT,nom}$ is enabled and $R_{TT(WR)}$ is either enabled or disabled.
2. ODTH4 is defined from ODT registered HIGH to ODT registered LOW; in this example, ODTH4 is satisfied. ODT registered LOW at T5 is also legal.

**Dynamic ODT: Without WRITE Command**

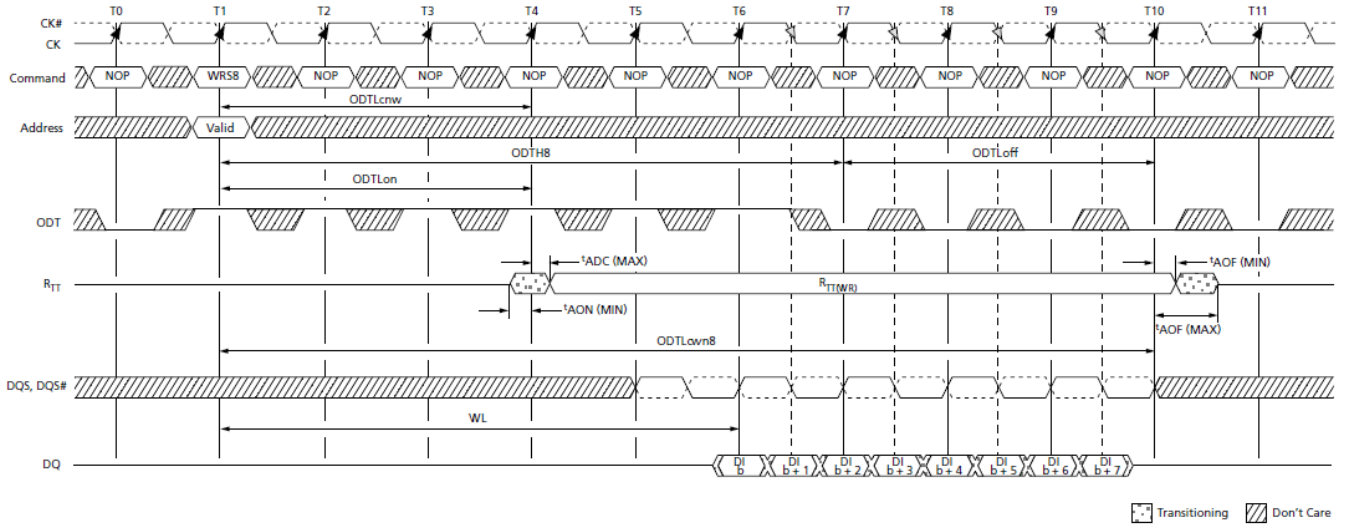


Notes: 1. Via MRS or OTF; AL = 0, CWL = 5. If $R_{TT,nom}$ can be either enabled or disabled, ODT can be HIGH. $R_{TT(WR)}$ is enabled.
2. In this example, ODTH8 = 6 is satisfied exactly.

**Dynamic ODT: ODT Pin Asserted Together with WRITE Command for 6 Clock Cycles, BL8**

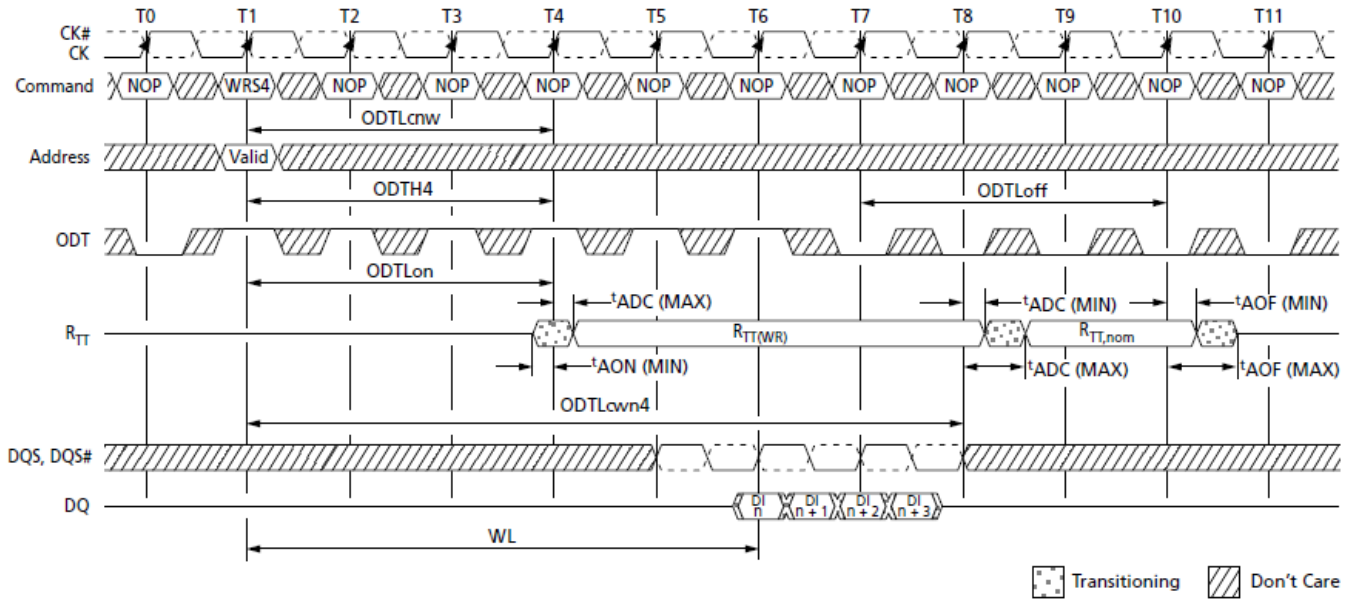


Notes: 1. Via MRS or OTF. AL = 0, CWL = 5. $R_{TT,nom}$ and $R_{TT(WR)}$ are enabled.
2. ODTH4 is defined from ODT registered HIGH to ODT registered LOW, so in this example, ODTH4 is satisfied. ODT registered LOW at T5 is also legal.

**Dynamic ODT: ODT Pin Asserted with WRITE Command for 6 Clock Cycles, BC4**

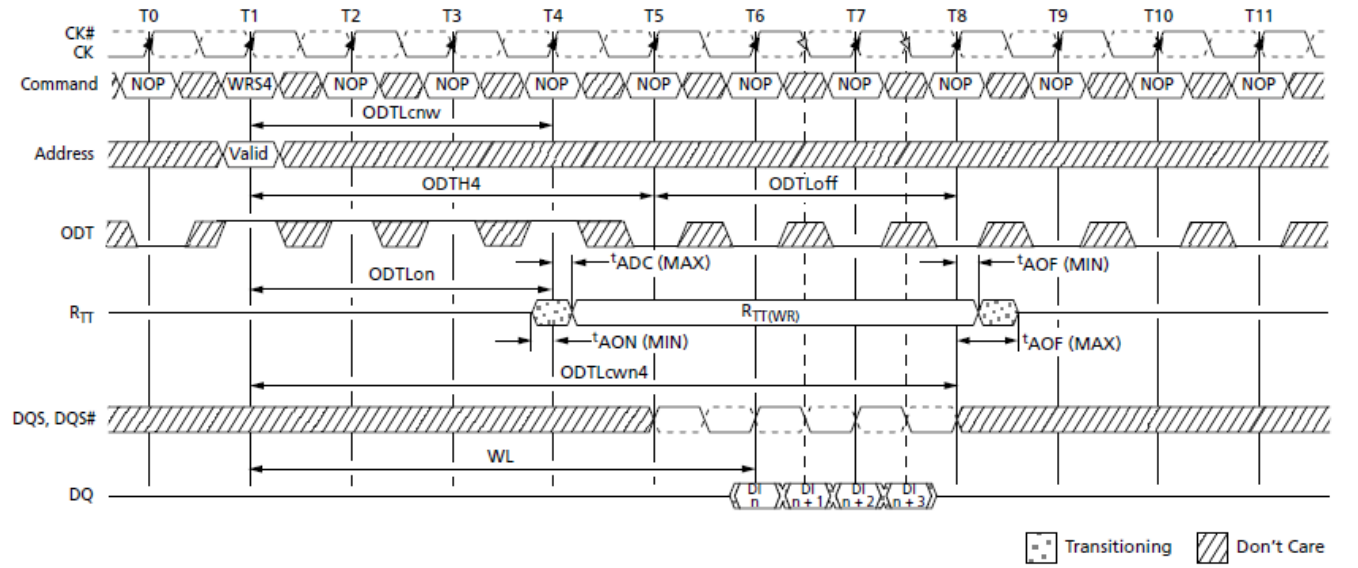


Notes: 1. Via MRS or OTF. AL = 0, CWL = 5. $R_{TT,nom}$ can be either enabled or disabled. If disabled, ODT can remain HIGH. $R_{TT(WR)}$ is enabled.
2. In this example ODTH4 = 4 is satisfied exactly.

**Dynamic ODT: ODT Pin Asserted with WRITE Command for 4 Clock Cycles, BC4**

## Synchronous ODT Mode

Synchronous ODT mode is selected whenever the DLL is turned on and locked and when either RTT,nom or RTT(WR) is enabled. Based on the power-down definition, these modes are:

- Any bank active with CKE HIGH
- Refresh mode with CKE HIGH
- Idle mode with CKE HIGH
- Active power-down mode (regardless of MR0[12])
- Precharge power-down mode if DLL is enabled by MR0[12] during precharge powerdown

## ODT Latency and Posted ODT

In synchronous ODT mode, RTT turns on ODTLon clock cycles after ODT is sampled HIGH by a rising clock edge and turns off ODTLoff clock cycles after ODT is registered LOW by a rising clock edge. The actual on/off times varies by $^{t}$AON and $^{t}$AOF around each clock edge (see Synchronous ODT Parameters table). The ODT latency is tied to the WRITE latency (WL) by ODTLon = WL - 2 and ODTLoff = WL - 2.

Since write latency is made up of CAS WRITE latency (CWL) and additive latency (AL), the AL programmed into the mode register (MR1[4, 3]) also applies to the ODT signal.

The device's internal ODT signal is delayed a number of clock cycles defined by the AL relative to the external ODT signal. Thus, ODTLon = CWL + AL - 2 and ODTLoff = CWL + AL - 2.

## Timing Parameters

Synchronous ODT mode uses the following timing parameters: ODTLon, ODTLoff, ODTH4, ODTH8, $^{t}$AON, and $^{t}$AOF. The minimum $R_{TT}$ turn-on time ($^{t}$AON [MIN]) is the point at which the device leaves High-Z and ODT resistance begins to turn on. Maximum $R_{TT}$ turn-on time ($^{t}$AON [MAX]) is the point at which ODT resistance is fully on. Both are measured relative to ODTLon. The minimum $R_{TT}$ turn-off time ($^{t}$AOF [MIN]) is the point at which the device starts to turn off ODT resistance. The maximum $R_{TT}$ turn off time ($^{t}$AOF [MAX]) is the point at which ODT has reached High-Z. Both are measured from ODTLoff.

When ODT is asserted, it must remain HIGH until ODTH4 is satisfied. If a WRITE command is registered by the DRAM with ODT HIGH, then ODT must remain HIGH until ODTH4 (BC4) or ODTH8 (BL8) after the WRITE command (see Synchronous ODT (BC4) figure).

ODTH4 and ODTH8 are measured from ODT registered HIGH to ODT registered LOW or from the registration of a WRITE command until ODT is registered LOW.

**Synchronous ODT Parameters**

| Symbol | Description | Begins at | Defined to | Definition for All DDR3L Speed Bins | Unit |
|---|---|---|---|---|---|
| ODTLon | ODT synchronous turn-on delay | ODT registered HIGH | $R_{TT(ON)}$ ±$^{t}$AON | CWL + AL - 2 | $^{t}$CK |
| ODTLoff | ODT synchronous turn-off delay | ODT registered HIGH | $R_{TT(OFF)}$ ±$^{t}$AOF | CWL +AL - 2 | $^{t}$CK |
| ODTH4 | ODT minimum HIGH time after ODT assertion or WRITE (BC4) | ODT registered HIGH or write regis- tration with ODT HIGH | ODT registered LOW | 4$^{t}$CK | $^{t}$CK |
| ODTH8 | ODT minimum HIGH time after WRITE (BL8) | Write registration with ODT HIGH | ODT registered LOW | 6$^{t}$CK | $^{t}$CK |
| $^{t}$AON | ODT turn-on relative to ODTLon completion | Completion of ODTLon | $R_{TT(ON)}$) | See Electrical Charac- teristics and AC Oper- ating Conditions ta- ble | ps |
| $^{t}$AOF | ODT turn-off relative to ODTLoff completion | Completion of ODTLoff | $R_{TT(OFF)}$ | 0.5$^{t}$CK ± 0.2$^{t}$CK | $^{t}$CK |

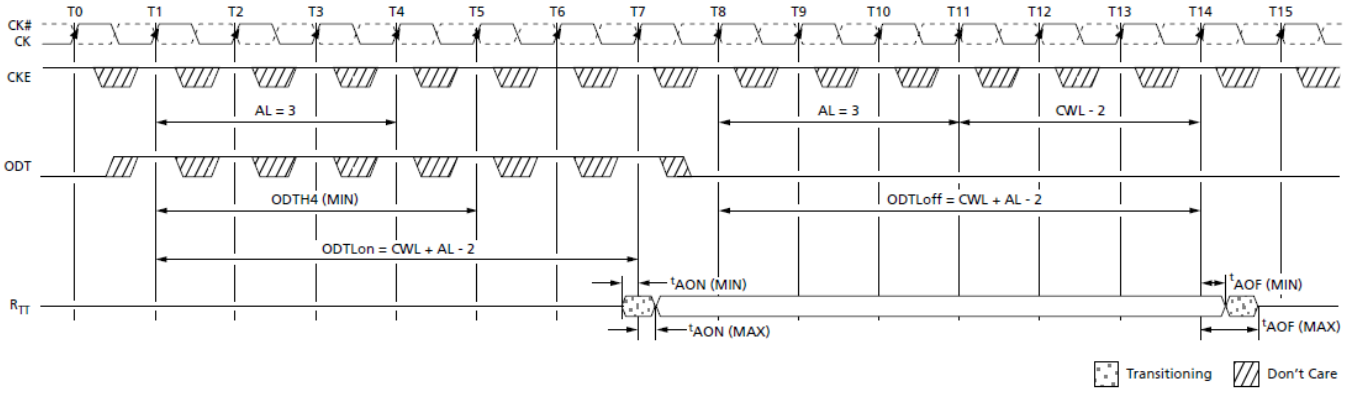


Note: 1. AL = 3; CWL = 5; ODTLon = WL = 6.0; ODTLoff = WL - 2 = 6. $R_{TT,nom}$ is enabled.

**Synchronous ODT**

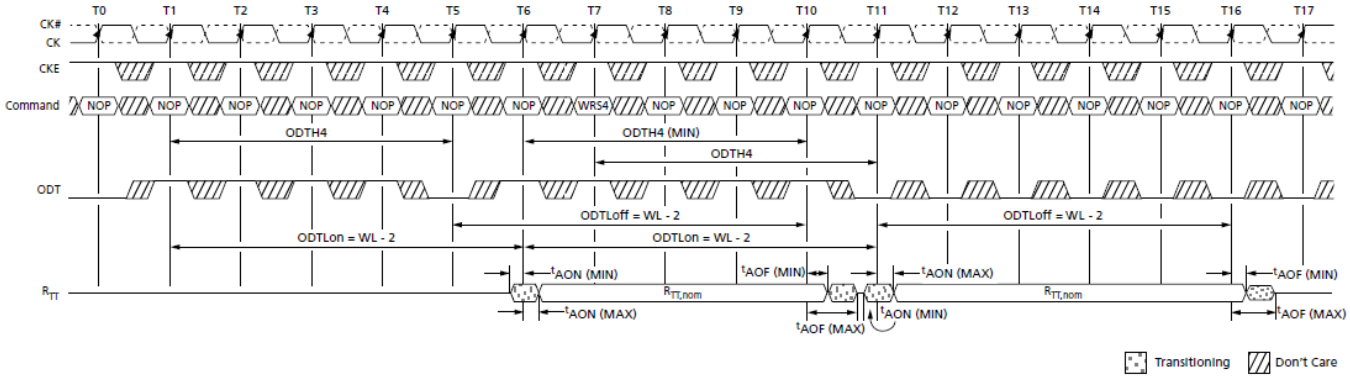


**Synchronous ODT (BC4)**

**Note:**

1. WL = 7. $R_{TT,nom}$ is enabled. $R_{TT(WR)}$ is disabled.
2. ODT must be held HIGH for at least ODTH4 after assertion (T1).
3. ODT must be kept HIGH ODTH4 (BC4) or ODTH8 (BL8) after the WRITE command (T7).
4. ODTH is measured from ODT first registered HIGH to ODT first registered LOW or from the registration of the WRITE command with ODT HIGH to ODT registered LOW.
5. Although ODTH4 is satisfied from ODT registered HIGH at T6, ODT must not go LOW before T11 as ODTH4 must also be satisfied from the registration of the WRITE command at T7.

## ODT Off During READs

Because the device cannot terminate and drive at the same time, $R_{TT}$ must be disabled at least one-half clock cycle before the READ preamble by driving the ODT ball LOW (if either $R_{TT,nom}$ or $R_{TT(WR)}$ is enabled). $R_{TT}$ may not be enabled until the end of the postamble, as shown in the following example.
Note: ODT may be disabled earlier and enabled later than shown in ODT During READs figure.

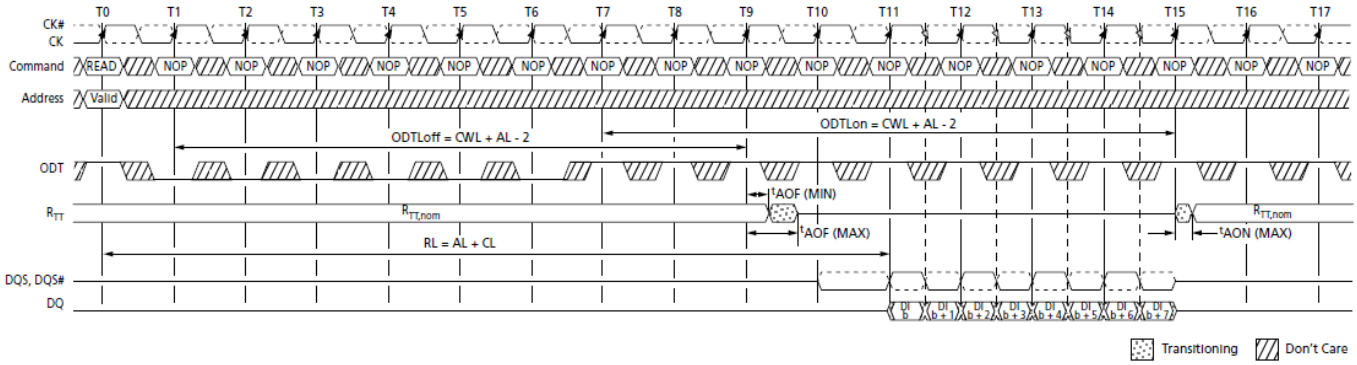


Note: 1. ODT must be disabled externally during READs by driving ODT LOW. For example, CL = 6; AL = CL - 1 = 5; RL = AL + CL = 11; CWL = 5; ODTLon = CWL + AL - 2 = 8; ODTLoff = CWL + AL - 2 = 8. $R_{TT,nom}$ is enabled. $R_{TT(WR)}$ is a "Don't Care."

**ODT During READs**

## Asynchronous ODT Mode

Asynchronous ODT mode is available when the DRAM runs in DLL on mode and when either $R_{TT,nom}$ or $R_{TT(WR)}$ is enabled; however, the DLL is temporarily turned off in precharged power-down standby (via MR0[12]). Additionally, ODT operates asynchronously when the DLL is synchronizing after being reset. See Power-Down Mode for definition and guidance over power-down details.

In asynchronous ODT timing mode, the internal ODT command is not delayed by AL relative to the external ODT command. In asynchronous ODT mode, ODT controls $R_{TT}$ by analog time. The timing parameters $^{t}$AONPD and $^{t}$AOFPD replace ODTLon/$^{t}$AON and ODTLoff/$^{t}$AOF, respectively, when ODT operates asynchronously.

The minimum $R_{TT}$ turn-on time ($^{t}$AONPD [MIN]) is the point at which the device termination circuit leaves High-Z and ODT resistance begins to turn on. Maximum $R_{TT}$ turnon time ($^{t}$AONPD [MAX]) is the point at which ODT resistance is fully on. $^{t}$AONPD (MIN) and $^{t}$AONPD (MAX) are measured from ODT being sampled HIGH.

The minimum $R_{TT}$ turn-off time ($^{t}$AOFPD [MIN]) is the point at which the device termination circuit starts to turn off ODT resistance. Maximum $R_{TT}$ turn-off time ($^{t}$AOFPD [MAX]) is the point at which ODT has reached High-Z. $^{t}$AOFPD (MIN) and $^{t}$AOFPD (MAX) are measured from ODT being sampled LOW.

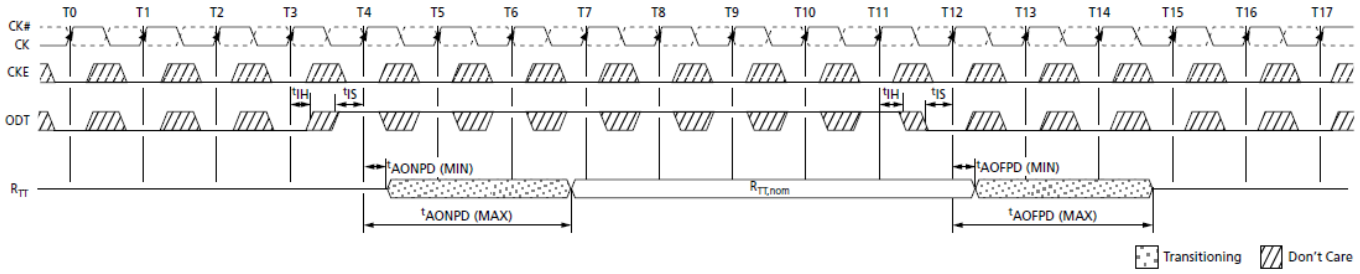


Note: 1. AL is ignored.

**Asynchronous ODT Timing with Fast ODT Transition**

### Asynchronous ODT Timing Parameters for All Speed Bins

| Symbol | Description | Min | Max | Unit |
|---|---|---|---|---|
| $^{t}$AONPD | Asynchronous $R_{TT}$ turn-on delay (power-down with DLL off) | 2 | 8.5 | ns |
| $^{t}$AOFPD | Asynchronous $R_{TT}$ turn-off delay (power-down with DLL off) | 2 | 8.5 | ns |

## Synchronous to Asynchronous ODT Mode Transition (Power-Down Entry)

There is a transition period around power-down entry (PDE) where the DRAM's ODT may exhibit either synchronous or asynchronous behavior. This transition period occurs if the DLL is selected to be off when in precharge power-down mode by the setting MR0[12] = 0. Power-down entry begins $^{t}$ANPD prior to CKE first being registered LOW, and ends when CKE is first registered LOW. $^{t}$ANPD is equal to the greater of ODTLoff + 1$^{t}$CK or ODTLon + 1$^{t}$CK. If a REFRESH command has been issued, and it is in progress when CKE goes LOW, power-down entry ends tRFC after the REFRESH command, rather than when CKE is first registered LOW. Power-down entry then becomes the greater of $^{t}$ANPD and $^{t}$RFC - REFRESH command to CKE registered LOW.

ODT assertion during power-down entry results in an $R_{TT}$ change as early as the lesser of $^{t}$AONPD (MIN) and ODTLon × tCK + $^{t}$AON (MIN), or as late as the greater of $^{t}$AONPD (MAX) and ODTLon × $^{t}$CK + $^{t}$AON (MAX). ODT de-assertion during power-down entry can result in an $R_{TT}$ change as early as the lesser of $^{t}$AOFPD (MIN) and ODTLoff × $^{t}$CK + $^{t}$AOF (MIN), or as late as the greater of $^{t}$AOFPD (MAX) and ODTLoff × $^{t}$CK + $^{t}$AOF (MAX). ODT Parameters for Power-Down (DLL Off) Entry and Exit Transition Period table summarizes these parameters.

If AL has a large value, the uncertainty of the state of $R_{TT}$ becomes quite large. This is because ODTLon and ODTLoff are derived from the WL; and WL is equal to CWL + AL.

Synchronous to Asynchronous Transition During Precharge Power-Down (DLL Off) Entry figure shows three different cases:

- ODT_A: Synchronous behavior before $^{t}$ANPD.
- ODT_B: ODT state changes during the transition period with $^{t}$AONPD (MIN) < ODTLon × $^{t}$CK + $^{t}$AON (MIN) and $^{t}$AONPD (MAX) > ODTLon × $^{t}$CK + $^{t}$AON (MAX).
- ODT_C: ODT state changes after the transition period with asynchronous behavior.

**ODT Parameters for Power-Down (DLL Off) Entry and Exit Transition Period**

| Description | Min | Max |
|---|---|---|
| Power-down entry transition period (power-down entry) | Greater of: $^{t}$ANPD or $^{t}$RFC - refresh to CKE LOW | |
| Power-down exit transition period (power-down exit) | $^{t}$ANPD + $^{t}$XPDLL | |
| ODT to $R_{TT}$ turn-on delay (ODTLon = WL - 2) | Lesser of: $^{t}$AONPD (MIN) (2ns) or ODTLon × $^{t}$CK + $^{t}$AON (MIN) | Greater of: $^{t}$AONPD (MAX) (8.5ns) or ODTLon × $^{t}$CK + $^{t}$AON (MAX) |
| ODT to $R_{TT}$ turn-off delay (ODTLoff = WL - 2) | Lesser of: $^{t}$AOFPD (MIN) (2ns) or ODTLoff × $^{t}$CK + $^{t}$AOF (MIN) | Greater of: $^{t}$AOFPD (MAX) (8.5ns) or ODTLoff × $^{t}$CK + $^{t}$AOF (MAX) |
| $^{t}$ANPD | WL - 1 (greater of ODTLoff + 1 or ODTLon + 1) | |

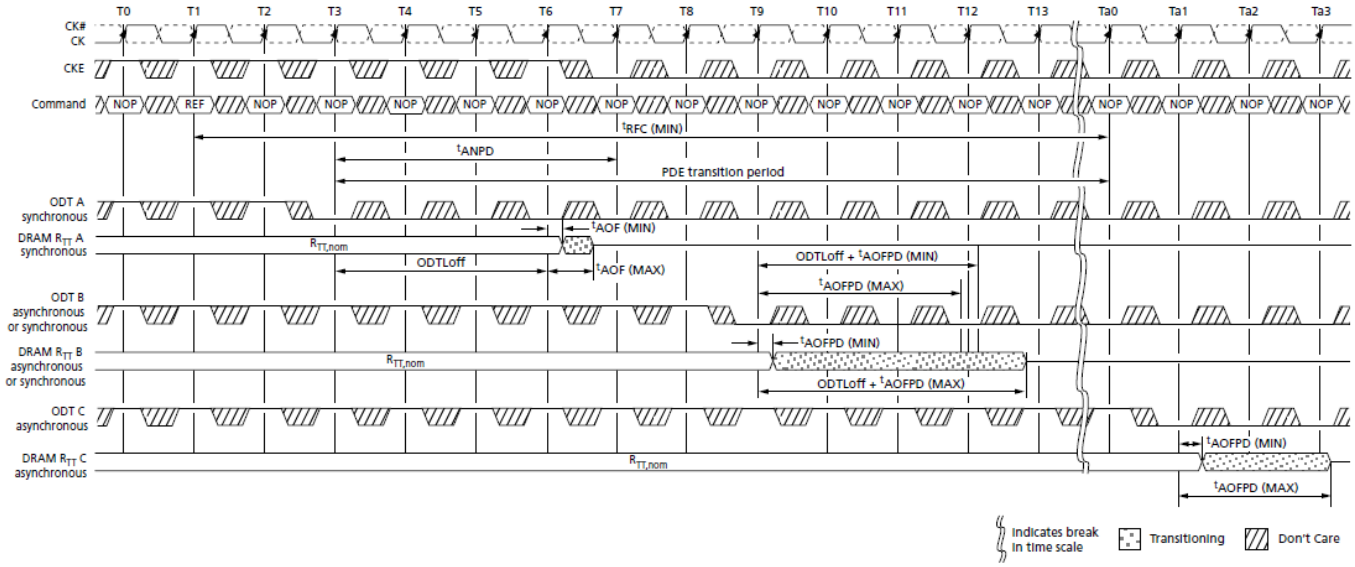


Note: 1. AL = 0; CWL = 5; ODTL(off) = WL - 2 = 3.

**Synchronous to Asynchronous Transition During Precharge Power-Down (DLL Off) Entry**

## Asynchronous to Synchronous ODT Mode Transition (Power-Down Exit)

The DRAM's ODT can exhibit either asynchronous or synchronous behavior during power-down exit (PDX). This transition period occurs if the DLL is selected to be off when in precharge power-down mode by setting MR0[12] to 0. Power-down exit begins tANPD prior to CKE first being registered HIGH, and ends $^{t}$XPDLL after CKE is first registered HIGH. $^{t}$ANPD is equal to the greater of ODTLoff + 1$^{t}$CK or ODTLon + 1$^{t}$CK. The transition period is $^{t}$ANPD + $^{t}$XPDLL.

ODT assertion during power-down exit results in an $R_{TT}$ change as early as the lesser of $^{t}$AONPD (MIN) and ODTLon × $^{t}$CK + $^{t}$AON (MIN), or as late as the greater of $^{t}$AONPD (MAX) and ODTLon × $^{t}$CK + $^{t}$AON (MAX). ODT de-assertion during power-down exit may result in an $R_{TT}$ change as early as the lesser of $^{t}$AOFPD (MIN) and ODTLoff × $^{t}$CK + $^{t}$AOF (MIN), or as late as the greater of $^{t}$AOFPD (MAX) and ODTLoff × $^{t}$CK + $^{t}$AOF (MAX).

ODT Parameters for Power-Down (DLL Off) Entry and Exit Transition Period table summarizes these parameters.

If AL has a large value, the uncertainty of the $R_{TT}$ state becomes quite large. This is because ODTLon and ODTLoff are derived from WL, and WL is equal to CWL + AL. Asynchronous to Synchronous Transition During Precharge Power-Down (DLL Off) Exit figure shows three different cases:

- ODT C: Asynchronous behavior before $^{t}$ANPD.
- ODT B: ODT state changes during the transition period, with $^{t}$AOFPD (MIN) < ODTLoff × $^{t}$CK + $^{t}$AOF (MIN), and ODTLoff × $^{t}$CK + $^{t}$AOF (MAX) > $^{t}$AOFPD (MAX).
- ODT A: ODT state changes after the transition period with synchronous response.

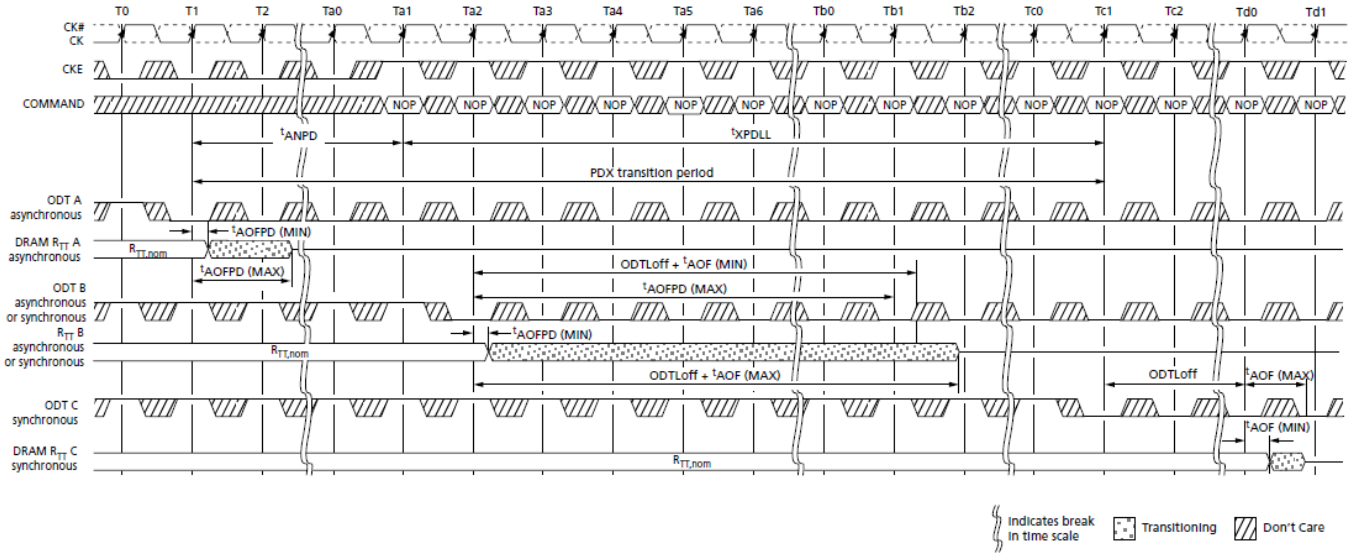


Note: 1. CL = 6; AL = CL - 1; CWL = 5; ODTLoff = WL - 2 = 8.

**Asynchronous to Synchronous Transition During Precharge Power-Down (DLL Off) Exit**

## Asynchronous to Synchronous ODT Mode Transition (Short CKE Pulse)

If the time in the precharge power-down or idle states is very short (short CKE LOW pulse), the power-down entry and power-down exit transition periods overlap. When overlap occurs, the response of the DRAM's $R_{TT}$ to a change in the ODT state can be synchronous or asynchronous from the start of the power-down entry transition period to the end of the power-down exit transition period, even if the entry period ends later than the exit period.

If the time in the idle state is very short (short CKE HIGH pulse), the power-down exit and power-down entry transition periods overlap. When this overlap occurs, the response of the DRAM's RTT to a change in the ODT state may be synchronous or asynchronous from the start of power-down exit transition period to the end of the powerdown entry transition period.

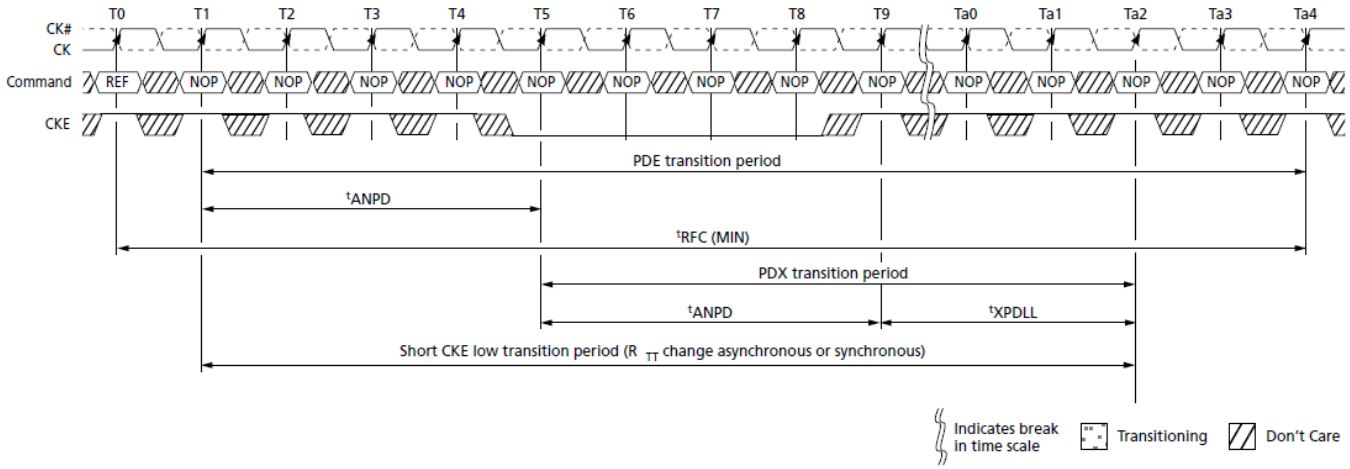


Note: 1. AL = 0, WL = 5, $^{t}$ANPD = 4.

**Transition Period for Short CKE LOW Cycles with Entry and Exit Period Overlapping**

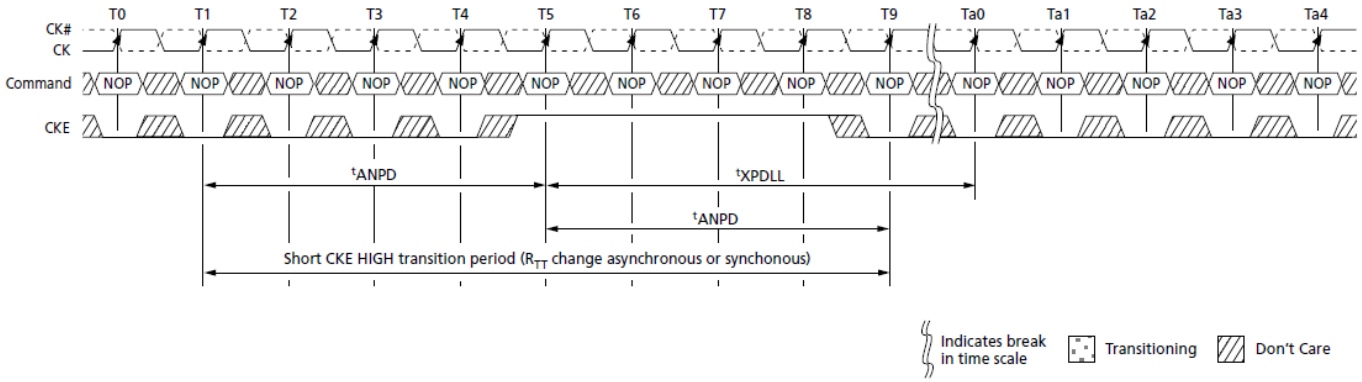


Note: 1. AL = 0, WL = 5, $^{t}$ANPD = 4.

**Transition Period for Short CKE HIGH Cycles with Entry and Exit Period Overlapping**

## PACKING DIMENSIONS

## 96-BALL DDR SDRAM ( 7.5x13 mm )

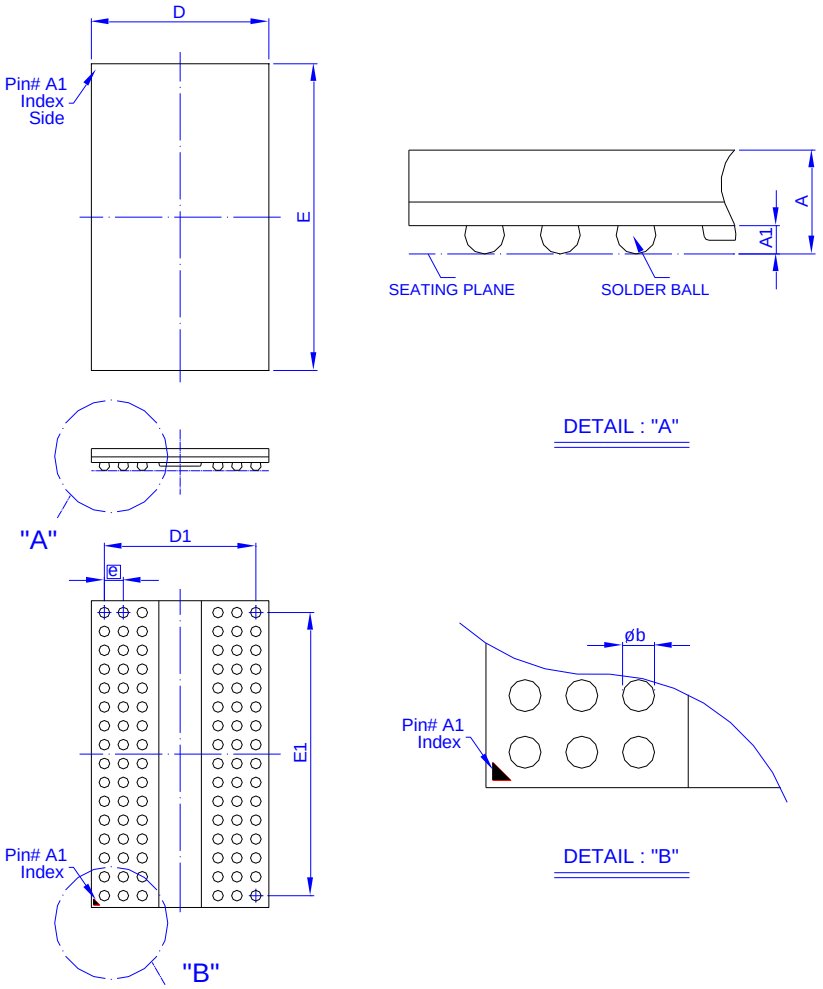


| Symbol | Dimension in mm | | | Dimension in inch | | |
|---|---|---|---|---|---|---|
| | Min | Norm | Max | Min | Norm | Max |
| A | | | 1.00 | | | 0.039 |
| $A_1$ | 0.30 | 0.35 | 0.40 | 0.012 | 0.014 | 0.016 |
| $\Phi_b$ | 0.40 | 0.45 | 0.50 | 0.016 | 0.018 | 0.020 |
| D | 7.40 | 7.50 | 7.60 | 0.291 | 0.295 | 0.299 |
| E | 12.90 | 13.00 | 13.10 | 0.508 | 0.512 | 0.516 |
| $D_1$ | 6.40 BSC | | | 0.252 BSC | | |
| $E_1$ | 12.00 BSC | | | 0.472 BSC | | |
| e | 0.80 BSC | | | 0.031 BSC | | |

Controlling dimension : Millimeter.
(Revision date : Nov172 2017)

## Revision History

| Revision | Date | Description |
|---|---|---|
| 1.0 | 2024.07.02 | Original |
| 1.1 | 2025.08.01 | Modify: Absolute Maximum Ratings temperature |

## Important Notice

All rights reserved.

No part of this document may be reproduced or duplicated in any form or by any means without the prior permission of ESMT.

The contents contained in this document are believed to be accurate at the time of publication. ESMT assumes no responsibility for any error in this document, and reserves the right to change the products or specification in this document without notice.

The information contained herein is presented only as a guide or examples for the application of our products. No responsibility is assumed by ESMT for any infringement of patents, copyrights, or other intellectual property rights of third parties which may result from its use. No license, either express, implied or otherwise, is granted under any patents, copyrights or other intellectual property rights of ESMT or others.

Any semiconductor devices may have inherently a certain rate of failure. To minimize risks associated with customer's application, adequate design and operating safeguards against injury, damage, or loss from such failure, should be provided by the customer when making application designs.

ESMT's products are not authorized for use in critical applications such as, but not limited to, life support devices or system, where failure or abnormal operation may directly affect human lives or cause physical injury or property damage. If products described here are to be used for such kinds of application, purchaser must do its own quality assurance testing appropriate to such applications.